Portescap

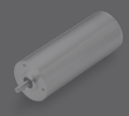
Brushless dc motors

Brush dc motors

Disc magnet motors

Can stack motors

Can stack linear actuators

Gearheads

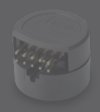
Encoders

ROSIER MECATRONIQUE
L'ARCHITECTE DE VOS MOUVEMENTS
Tél.04 72 04 68 61
www.rosier.fr
ACTIONNEUR ET VÉRIN ÉLECTRIQUES MOTORISATION AXE LINEAIRE COMMANDE D'AXES ROBOT CARTÉSIEN SCARA 6 AXES

Brush DC Motors

Featuring a permanent magnet, coreless design, our brush DC motors deliver high efficiency and power density in a small, lightweight package. Built of high-quality materials for optimal performance, these motors offer a low moment of inertia, low friction and a long commutator life. They're perfect for compact applications requiring high acceleration, torque and efficiency, with no cogging.

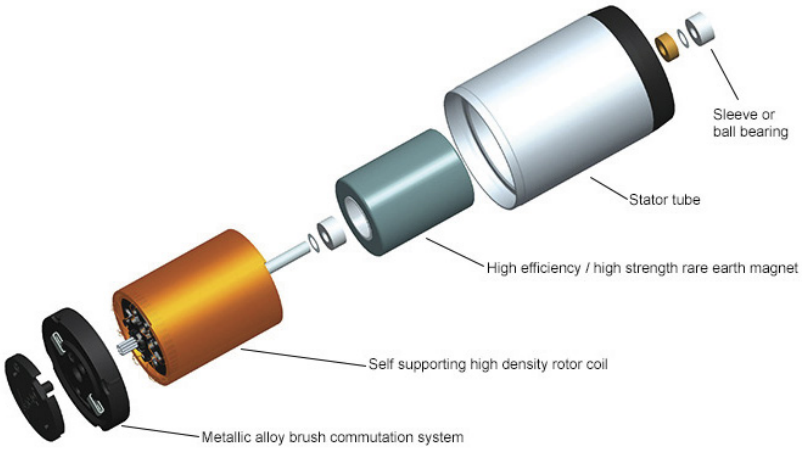

Compact, Efficient, Versatile Performance

Feature	Details	Application Advantages
Ultra-compact design	• Exceptional power density • High torque-to-volume ratio • Lightweight • Excellent heat dissipation	• Greater design flexibility • User comfort and convenience in handheld applications
Coreless rotor	• Ironless, self-supporting coil • Minimal air gaps • No inactive coil heads	• High acceleration, low moment of inertia • Low friction, low starting voltage • No cogging • No iron losses
Precious metal commutation system	• Low contact resistance, low friction • Available with REE coils	• Low no-load current, low starting voltage • Reduced electro erosion for longer brush lifetime
Graphite-copper commutation	• High current carrying capacity • Available with REE coils	• Perfect for boost in start-stop applications or incremental motions • Reduced electro erosion for longer brush lifetime
Neodymium permanent magnet	• High magnetic flux • Exceptional resistance to demagnetization	• High power and efficiency in a small, lightweight package • Linear speed-torque curve • Consistent power density over the motor lifetime
Alnico permanent magnet	• Medium magnetic flux	• Low magnetic flux leakage • Cost-effective • Linear speed-torque curve • Consistent power density over the motor lifetime

V092018 • © 2018 Portescap. Specifications subject to change without notice.

Ideal for Small, Portable and Handheld Devices

Medical devices & clinical diagnostics
- Laboratory automation
- Infusion systems
- Insulin pumps
- Diagnostic analyzers
- Miniature pumps

Instrumentation
- Dosing & dispensing systems
- Gas detection
- Land surveying
- Microscopes
- Explosive trace detection systems

Automation
- Humanoid robots

Other
- Power hand tools
- Rotary tattoo machines
- Valve actuation

Meet your Application's Working Point Requirements

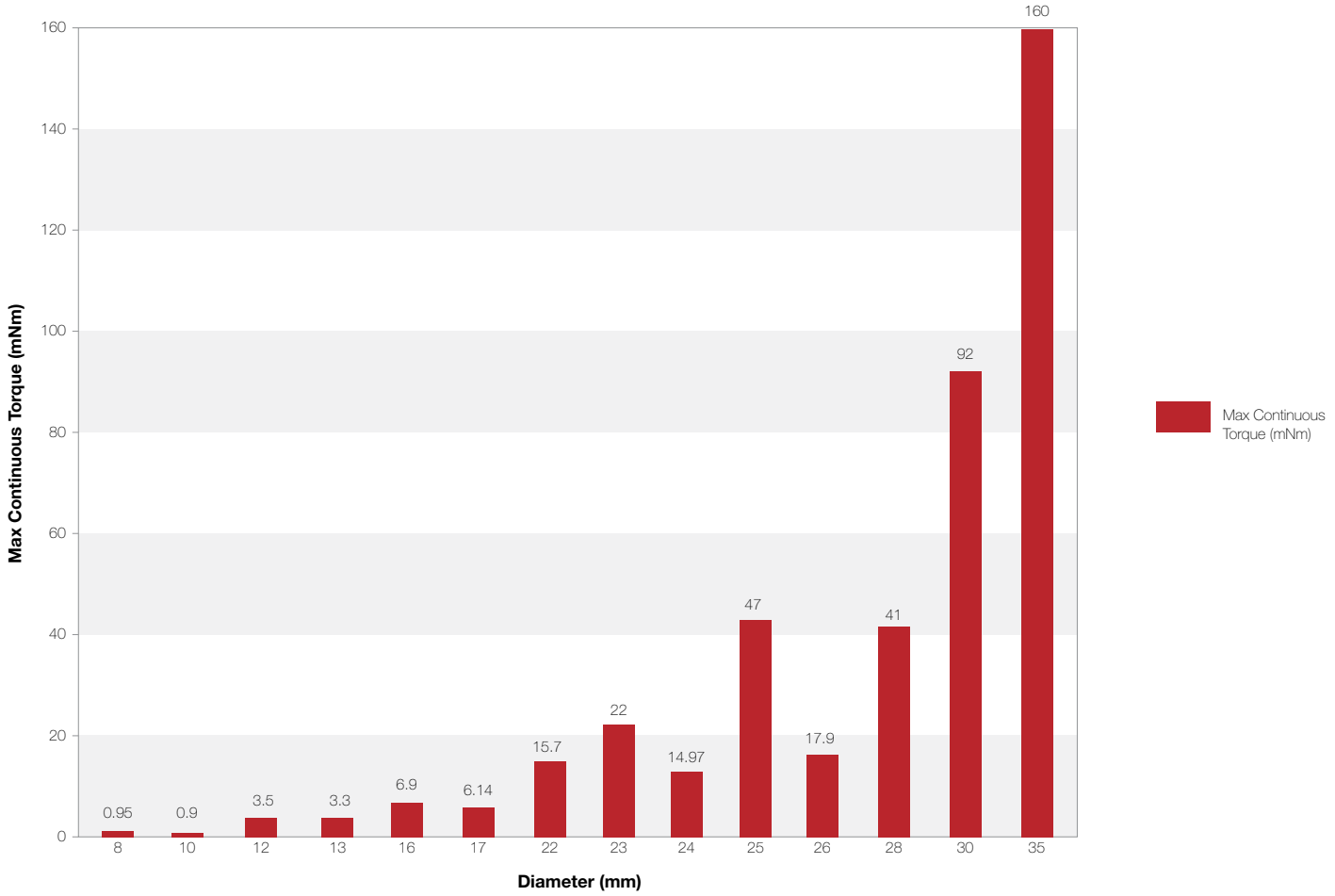

For complete product and application details, visit **portescap.com/brush-dc**

08GS61

Ø 8 mm • Precious metal commutation • 0.65 mNm

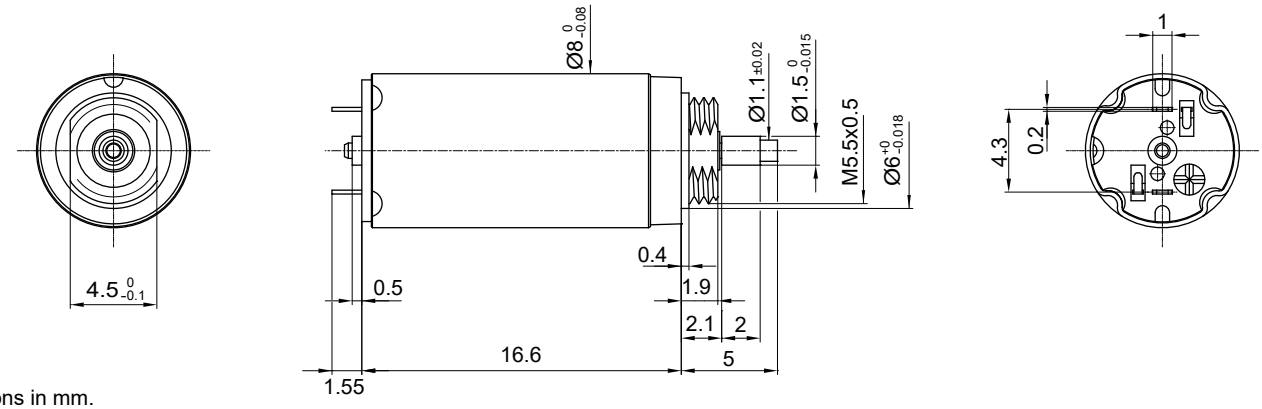

Dimensions in mm.

Electrical Data	Symbol	08GS61 •••• .3 107	105	105C	Unit
1 Nominal Voltage	V	2	4.5	6	Volt
2 No-Load Speed	n_0	7,000	10,670	11,000	rpm
3 No-Load Current	I_0	6.0	4.0	3.0	mA
4 Terminal Resistance	R	12.6	30.0	45.8	Ω
5 Output Power	$P_{2max.}$	0.5	0.5	0.5	W
6 Stall Torque	mNm	0.42 (0.06)	0.59 (0.09)	0.64 (0.1)	mNm (oz-in)
7 Efficiency	$h_{max.}$	65	70	72	%
8 Max Continuous Speed	$n_{e\ max.}$	10,000	10,000	10,000	rpm
9 Max Continuous Torque	$M_{e\ max.}$	0.64 (0.1)	0.64 (0.1)	0.66 (0.1)	mNm (oz-in)
10 Max Continuous Current	$I_{e\ max.}$	0.25	0.17	0.13	A
11 Back-EMF Constant	k_E	0.28	0.41	0.53	mV/rpm
12 Torque Constant	k_M	2.63	3.92	5.10	mNm/A
13 Motor Regulation	R/k^2	1,820.0	1,950.0	1,760.0	10^3/Nms
14 Friction Torque	T_F	0.02 (0.01)	0.02 (0.01)	0.02 (0.01)	mNm (oz-in)
15 Rotor Inductance	L	0.06	0.11	0.20	mH
16 Mechanical Time Constant	τ_m	5.5	5.9	5.3	ms
17 Rotor Inertia	J	0.03	0.03	0.03	g-cm²

General Data			
18 Thermal Resistance (rotor/body)	R_{th1}/R_{th2}	20/100	°C/W
19 Thermal Time Constant (rotor/stator)	t_{W1}/t_{W2}	5/100	S
20 Operating Temperature Range:	motor rotor	-30°C to 85°C (-22°F to 185°F) 100°C (212°F)	°C (°F) °C (°F)
21 Shaft Load Max.: (2 mm. from bearing)	 -radial -axial	With sleeve bearings 0.5 (1.8) 30 (107.9)	 N (oz) N (oz)
22 Shaft Play:	-radial -axial	<0.015 (0.0006) 0.100 (0.0039)	mm (inch) mm (inch)
23 Weight	g	3.8 (0.14)	g (oz)

Execution Table

Gearbox	Single Shaft
R10	16
R08	Upon Request

No Load Speed vs. Torque

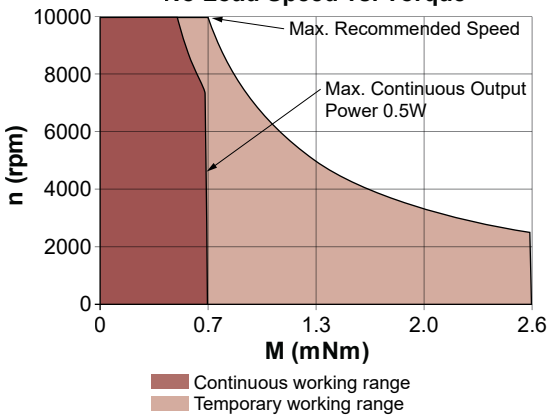

V092018 • © 2018 Portescap. Specifications subject to change without notice.

10NS61 Athlonix™

Ø 10 mm • Precious metal commutation • 0.9 mNm

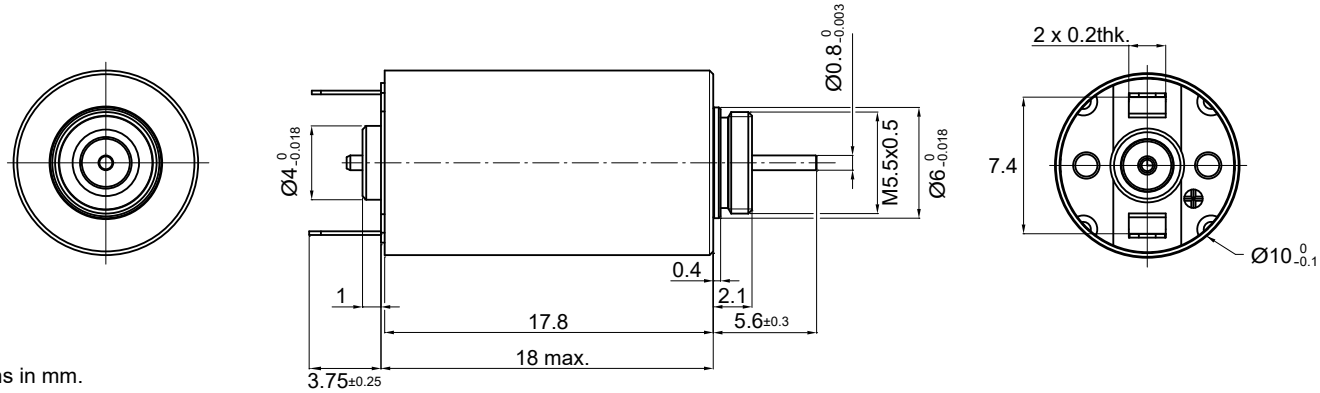

Dimensions in mm.

Electrical Data		Symbol	10NS61 •••• .5 107C	105C	104C	Unit
1	Nominal Voltage	V	3	6	9	Volt
2	No-Load Speed	n_0	10,100	10,400	10,700	rpm
3	No-Load Current	I_0	11.0	4.2	3.6	mA
4	Terminal Resistance	R	10.8	43.0	98.0	Ω
5	Output Power	$P_{2max.}$	0.7	0.7	0.7	W
6	Stall Torque	mNm	0.76 (0.11)	0.75 (0.11)	0.71 (0.1)	mNm (oz-in)
7	Efficiency	$h_{max.}$	64	68	64	%
8	Max Continuous Speed	$n_{e\ max.}$	10,000	10,000	10,000	rpm
9	Max Continuous Torque	$M_{e\ max.}$	0.9 (0.13)	0.9 (0.13)	0.85 (0.13)	mNm (oz-in)
10	Max Continuous Current	$I_{e\ max.}$	0.34	0.17	0.12	A
11	Back-EMF Constant	k_E	0.29	0.57	0.81	mV/rpm
12	Torque Constant	k_M	2.72	5.40	7.70	mNm/A
13	Motor Regulation	R/k^2	1,500.0	1,500.0	1,600.0	10^3/Nms
14	Friction Torque	T_F	0.02 (0.01)	0.02 (0.01)	0.02 (0.01)	mNm (oz-in)
15	Rotor Inductance	L	0.01	0.02	0.03	mH
16	Mechanical Time Constant	τ_m	7.3	7.3	8.1	ms
17	Rotor Inertia	J	0.05	0.05	0.05	g-cm²

General Data				
18	Thermal Resistance (rotor/body)	R_{th1}/R_{th2}	23/48	°C/W
19	Thermal Time Constant (rotor/stator)	t_{W1}/t_{W2}	5/150	S
20	Operating Temperature Range:	motor rotor	-30°C to 85°C (-22°F to 185°F) 100°C (212°F)	°C (°F) °C (°F)
21	Shaft Load Max.: (2 mm. from bearing)		With sleeve bearings	
		-radial	0.5 (1.8)	N (oz)
		-axial	30 (107.9)	N (oz)
22	Shaft Play:	-radial -axial	<0.015 (0.0006) 0.100 (0.0039)	mm (inch) mm (inch)
23	Weight	g	7 (0.25)	g (oz)

Execution Table

Gearbox	Single Shaft
R10	3

No Load Speed vs. Torque

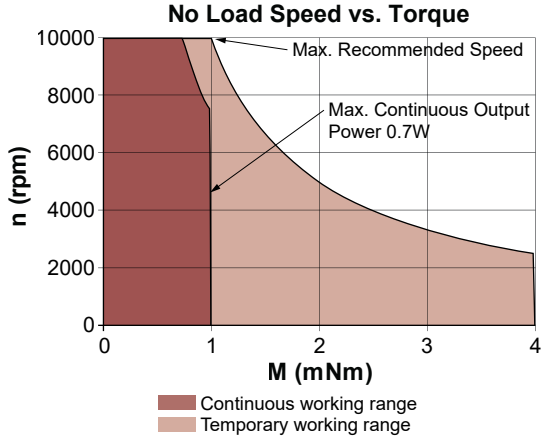

12G88 Athlonix™

Ø 12 mm • Precious metal commutation • 3.5 mNm

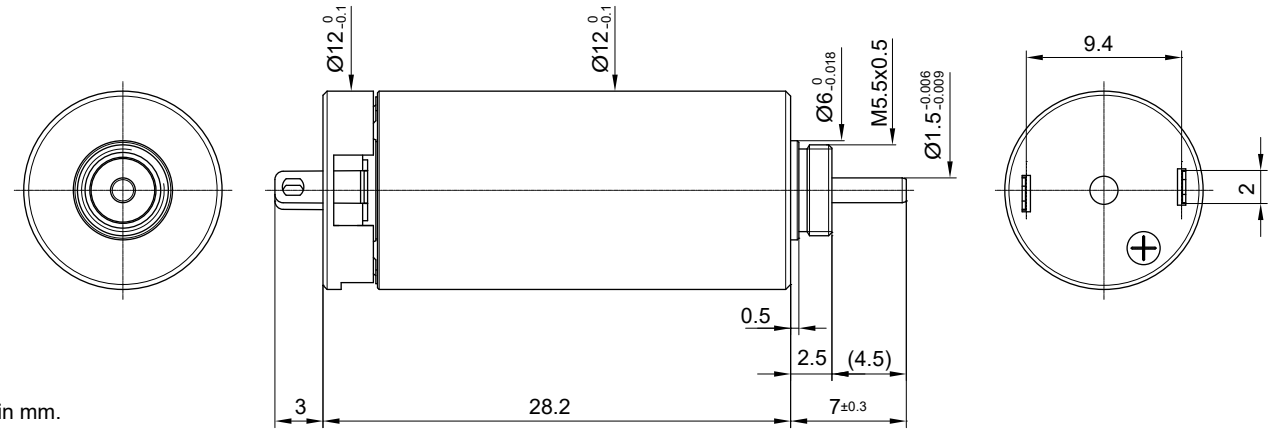

Dimensions in mm.

Electrical Data	Symbol	12G88 •••• .1001 215E	12G88 •••• .1001 210E	Unit
1 Nominal Voltage	V	4.5	9	Volt
2 No-Load Speed	n_0	8,670	9,900	rpm
3 No-Load Current	I_0	16.0	9.0	mA
4 Terminal Resistance	R	3.2	12.3	Ω
5 Output Power	$P_{2max.}$	2.7	2.4	W
6 Stall Torque	mNm	6.8 (0.97)	6.3 (0.9)	mNm (oz-in)
7 Efficiency	$h_{max.}$	80	79	%
8 Max Continuous Speed	$n_{e\ max.}$	10,000	10,000	rpm
9 Max Continuous Torque	$M_{e\ max.}$	3.5 (0.44)	3.1 (0.44)	mNm (oz-in)
10 Max Continuous Current	$I_{e\ max.}$	0.73	0.37	A
11 Back-EMF Constant	k_E	0.51	0.90	mV/rpm
12 Torque Constant	k_M	4.90	8.60	mNm/A
13 Motor Regulation	R/k^2	130.0	170.0	10^3/Nms
14 Friction Torque	T_F	0.08 (0.02)	0.08 (0.02)	mNm (oz-in)
15 Rotor Inductance	L	0.08	0.25	mH
16 Mechanical Time Constant	τ_m	3.8	4.3	ms
17 Rotor Inertia	J	0.29	0.26	g-cm²
General Data				
18 Thermal Resistance (rotor/body)	R_{th1}/R_{th2}	10/50		°C/W
19 Thermal Time Constant (rotor/stator)	t_{W1}/t_{W2}	6/300		S
20 Operating Temperature Range:	motor	-30°C to 85°C (-22°F to 185°F)		°C (°F)
	rotor	100°C (212°F)		°C (°F)
21 Shaft Load Max.:		With sleeve bearings		
(5 mm. from bearing)	-radial	1.5 (5.4)		N (oz)
	-axial	150 (539.5)		N (oz)
22 Shaft Play:	-radial	<0.015 (0.0006)		mm (inch)
	-axial	0.300 (0.012)		mm (inch)
23 Weight	g	15 (0.53)		g (oz)

Execution Table

Gearbox	Single Shaft	MR2
R10	1003	1005
R13	1002	1004

No Load Speed vs. Torque

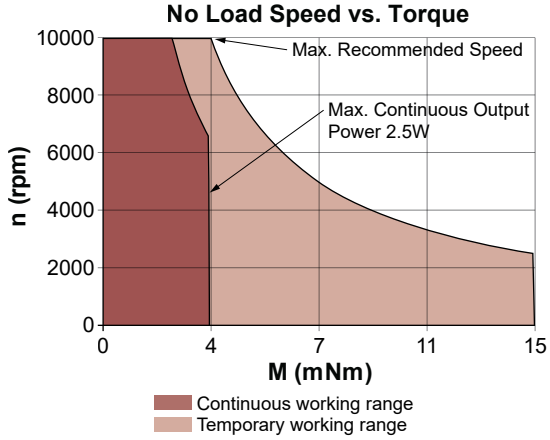

V092018 • © 2018 Portescap. Specifications subject to change without notice.

12GS88 Athlonix™

Ø 12 mm • Precious metal commutation • 1.5 mNm

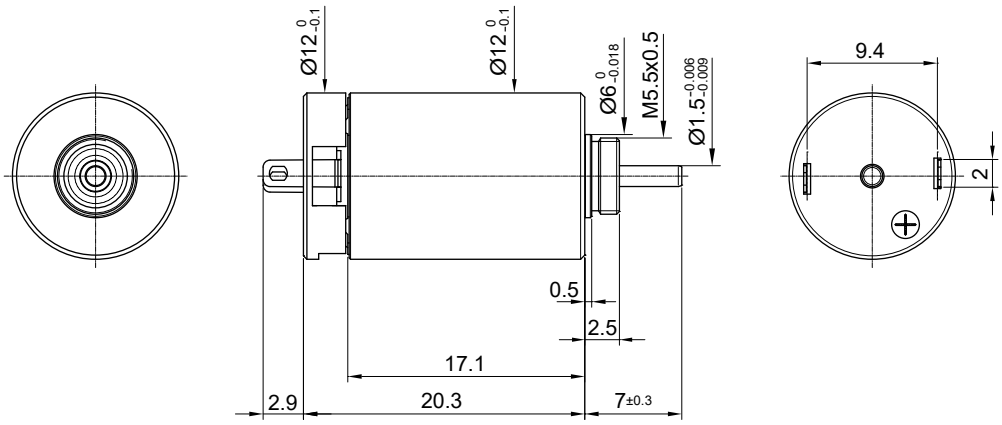

Dimensions in mm.

Electrical Data		Symbol	12GS88 •••• .1007 210E	12GS88 •••• .1007 208F	Unit
1	Nominal Voltage	V	3	6	Volt
2	No-Load Speed	n_0	7,280	9,000	rpm
3	No-Load Current	I_0	14.0	12.0	mA
4	Terminal Resistance	R	7.4	20.6	Ω
5	Output Power	$P_{2max.}$	1.2	1.1	W
6	Stall Torque	mNm	1.54 (0.22)	1.78 (0.26)	mNm (oz-in)
7	Efficiency	$h_{max.}$	66	64	%
8	Max Continuous Speed	$n_{e\ max.}$	10,000	10,000	rpm
9	Max Continuous Torque	$M_{e\ max.}$	1.51 (0.21)	1.45 (0.21)	mNm (oz-in)
10	Max Continuous Current	$I_{e\ max.}$	0.41	0.25	A
11	Back-EMF Constant	k_E	0.40	0.64	mV/rpm
12	Torque Constant	k_M	3.80	6.10	mNm/A
13	Motor Regulation	R/k^2	512.0	550.0	10^3/Nms
14	Friction Torque	T_F	0.07 (0.01)	0.07 (0.01)	mNm (oz-in)
15	Rotor Inductance	L	0.09	0.25	mH
16	Mechanical Time Constant	τ_m	9.7	12.0	ms
17	Rotor Inertia	J	0.19	0.21	g-cm²
General Data					
18	Thermal Resistance (rotor/body)	R_{th1}/R_{th2}	14/66		°C/W
19	Thermal Time Constant (rotor/stator)	t_{W1}/t_{W2}	5/150		S
20	Operating Temperature Range:	motor	-30°C to 85°C (-22°F to 185°F)		°C (°F)
		rotor	100°C (212°F)		°C (°F)
21	Shaft Load Max.:		With sleeve bearings		
	(5 mm. from bearing)	-radial	1.5 (5.4)		N (oz)
		-axial	150 (539.5}		N (oz)
22	Shaft Play:	-radial	<0.03 (0.0012)		mm (inch)
		-axial	0.15 (0.0059)		mm (inch)
23	Weight	g	13.5 (0.48)		g (oz)

Execution Table

Gearbox	Single Shaft	MR2
R10	Upon Request	Upon Request
R13	Upon Request	Upon Request

No Load Speed vs. Torque

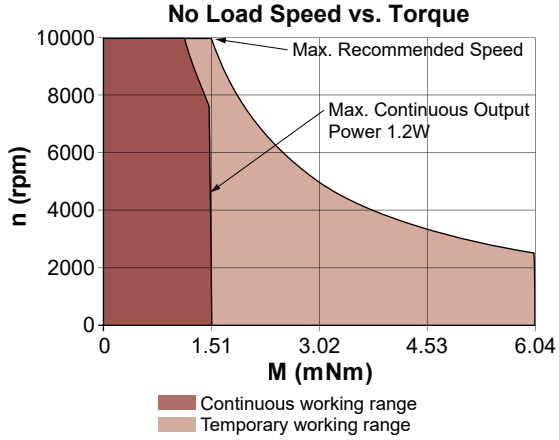

13N88

Ø 13 mm • Precious metal commutation • 3.3 mNm

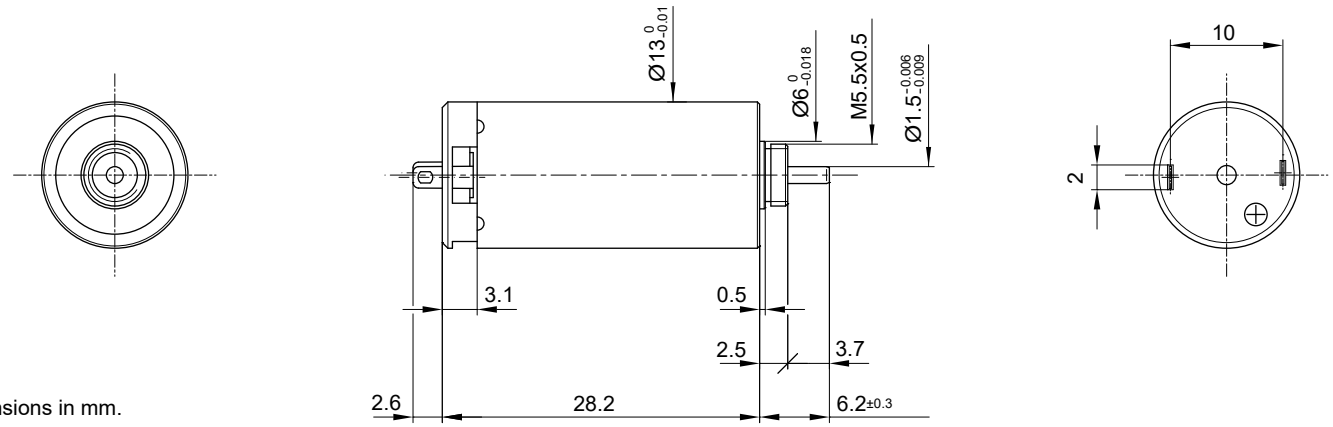

Dimensions in mm.

Electrical Data		Symbol	13N88 •••• .1 213E	110	107	Unit
1	Nominal Voltage	V	6	12	24	Volt
2	No-Load Speed	n_0	12,290	12,400	14,150	rpm
3	No-Load Current	I_0	25.6	13.6	8.8	mA
4	Terminal Resistance	R	4.2	13.7	47.4	Ω
5	Output Power	$P_{2max.}$	2.4	2.6	2.5	W
6	Stall Torque	mNm	6.5 (0.93)	8 (1.14)	8.2 (1.17)	mNm (oz-in)
7	Efficiency	$h_{max.}$	75	77	75	%
8	Max Continuous Speed	$n_{e\ max.}$	9,000	9,000	9,000	rpm
9	Max Continuous Torque	$M_{e\ max.}$	3 (0.47)	3.3 (0.47)	3.2 (0.46)	mNm (oz-in)
10	Max Continuous Current	$I_{e\ max.}$	0.69	0.38	0.21	A
11	Back-EMF Constant	k_E	0.48	0.95	1.67	mV/rpm
12	Torque Constant	k_M	4.58	9.10	15.90	mNm/A
13	Motor Regulation	R/k^2	200.0	165.0	185.0	10^3/Nms
14	Friction Torque	T_F	0.12 (0.02)	0.12 (0.02)	0.14 (0.02)	mNm (oz-in)
15	Rotor Inductance	L	0.07	0.25	0.80	mH
16	Mechanical Time Constant	τ_m	5.6	5.5	5.3	ms
17	Rotor Inertia	J	0.28	0.33	0.29	g-cm²

General Data				
18	Thermal Resistance (rotor/body)	R_{th1}/R_{th2}	10/40	°C/W
19	Thermal Time Constant (rotor/stator)	t_{W1}/t_{W2}	6/300	S
20	Operating Temperature Range:	motor rotor	-30°C to 85°C (-22°F to 185°F) 100°C (212°F)	°C (°F) °C (°F)
21	Shaft Load Max.: (5 mm. from bearing)	 -radial -axial	With sleeve bearings 1.5 (5.4) 150 (539.5)	 N (oz) N (oz)
22	Shaft Play:	-radial -axial	<0.03 (0.0012) 0.15 (0.0059)	mm (inch) mm (inch)
23	Weight	g	18 (0.64)	g (oz)

Execution Table

Gearbox	Single Shaft	13N88D12	MR2
R13	1	3	Upon Request

No Load Speed vs. Torque

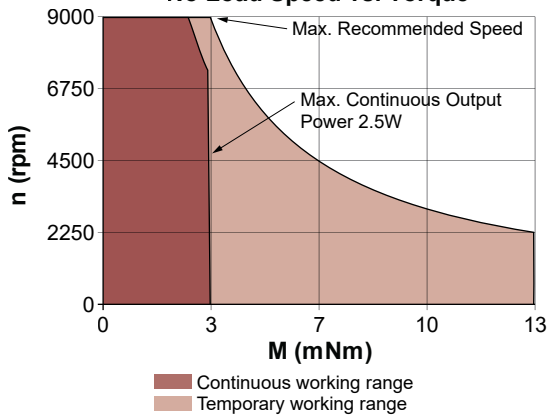

V092018 • © 2018 Portescap. Specifications subject to change without notice.

16C18

Ø 16 mm • Precious metal commutation • 1.12 mNm

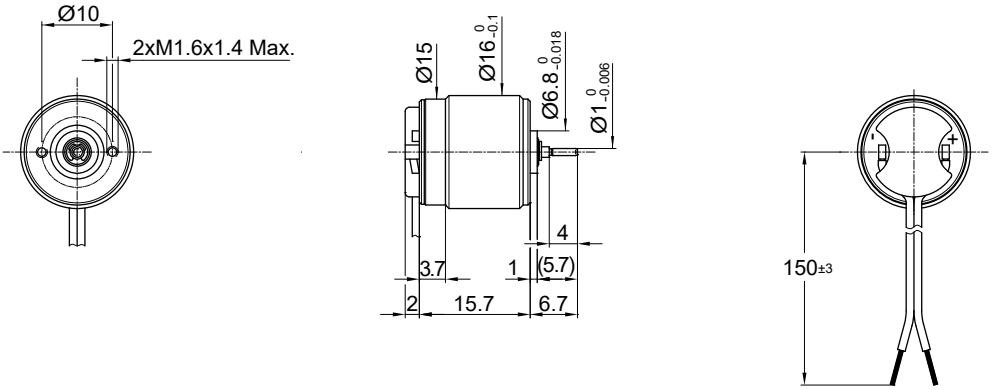

Dimensions in mm.

Electrical Data	Symbol	16C18 •••• .67 115	210	207	205	204	Unit
1 Nominal Voltage	V	1.5	4	6	12	15	Volt
2 No-Load Speed	n_0	15,300	14,700	15,700	16,200	16,000	rpm
3 No-Load Current	I_0	74.8	23.0	18.4	10.4	6.9	mA
4 Terminal Resistance	R	1.2	7.5	18.0	65.0	162.0	Ω
5 Output Power	$P_{2max.}$	0.7	0.8	0.7	0.8	0.7	W
6 Stall Torque	mNm	1.1	1.3	1.1	1.2	0.8	mNm (oz-in)
7 Efficiency	$h_{max.}$	57	63	59	58	53	%
8 Max Continuous Speed	$n_{e\ max.}$	10,000	10,000	10,000	10,000	10,000	rpm
9 Max Continuous Torque	$M_{e\ max.}$	0.98 (0.15)	1.12 (0.15)	1 (0.15)	1 (0.14)	0.79 (0.11)	mNm (oz-in)
10 Max Continuous Current	$I_{e\ max.}$	1.19	0.48	0.31	0.16	0.10	A
11 Back-EMF Constant	k_E	0.09	0.26	0.36	0.70	0.87	mV/rpm
12 Torque Constant	k_M	0.88	2.48	3.44	6.68	8.30	mNm/A
13 Motor Regulation	R/k^2	1555.0	1220.0	1520.0	1460.00	2350.00	10^3/Nms
14 Friction Torque	T_F	0.07 (0.02)	0.06 (0.01)	0.06 (0.01)	0.07 (0.02)	0.06 (0.01)	mNm (oz-in)
15 Rotor Inductance	L	20.00	150.00	250.00	1000.00	1000.00	mH
16 Mechanical Time Constant	τ_m	48.0	50.0	41.0	60.0	63.0	ms
17 Rotor Inertia	J	0.31	0.41	0.27	0.41	0.27	g-cm²

General Data			
18 Thermal Resistance (rotor/body)	R_{th1}/R_{th2}	15/40	°C/W
19 Thermal Time Constant (rotor/stator)	t_{W1}/t_{W2}	4/230	S
20 Operating Temperature Range:	motor	-30°C to 85°C (-22°F to 185°F)	°C (°F)
	rotor	100°C (212°F)	°C (°F)
21 Shaft Load Max.:		With sleeve bearings	
(5 mm. from bearing)	-radial	1.5 (5.4)	N (oz)
	-axial	100 (359.6)	N (oz)
22 Shaft Play:	-radial	<0.03 (0.0012)	mm (inch)
	-axial	0.15 (0.0059)	mm (inch)
23 Weight	g	14 (0.49)	g (oz)

Execution Table

Gearbox	Single Shaft	F16
B16	67	76
BA16	67	76
R16	67	76

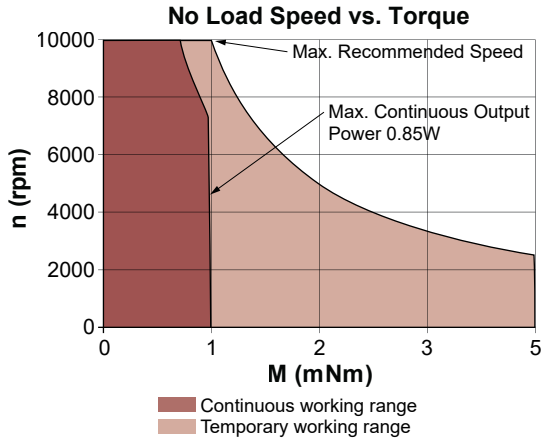

16DCP Athlonix™

Ø 16 mm • Precious metal commutation • 2.63 mNm

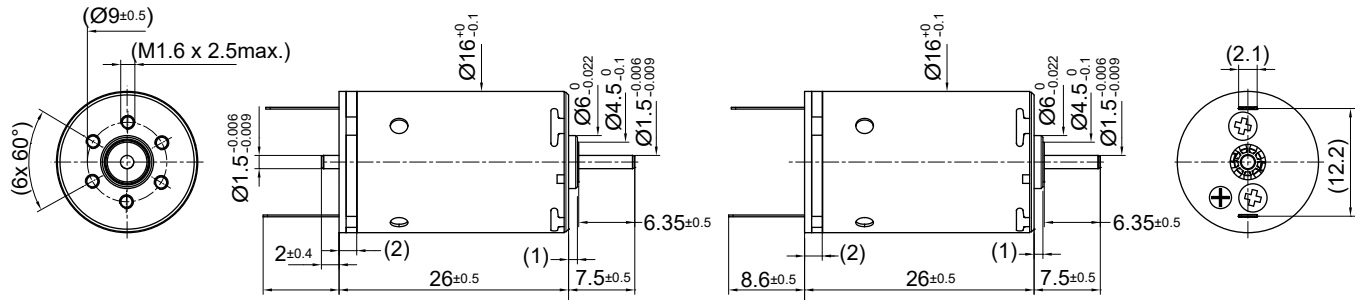

16DCP 26P2 •••• .2

16DCP 26P1 •••• .1

Dimensions in mm.

Electrical Data		Symbol	16DCP 26P1/P2 •••• .* 211P	208P	209E	205P	Unit
1	Nominal Voltage	V	3	6	9	12	Volt
2	No-Load Speed	n_0	7727	8044	7904	7658	rpm
3	No-Load Current	I_0	19.4	10.1	6.6	4.8	mA
4	Terminal Resistance	R	3.3	12.1	30.7	51.4	Ω
5	Output Power	$P_{2max.}$	1.4	1.4	1.3	1.4	W
6	Stall Torque	mNm	3.25 (0.47)	3.4 (0.49)	3.04 (0.44)	3.35 (0.48)	mNm (oz-in)
7	Efficiency	$h_{max.}$	73	74	72	73	%
8	Max Continuous Speed	$n_{e\ max.}$	10000	10000	10000	10000	rpm
9	Max Continuous Torque	$M_{e\ max.}$	2.58 (0.37)	2.59 (0.37)	2.46 (0.35)	2.63 (0.38)	mNm (oz-in)
10	Max Continuous Current	$I_{e\ max.}$	0.73	0.38	0.24	0.18	A
11	Back-EMF Constant	k_E	0.38	0.73	1.11	1.53	mV/rpm
12	Torque Constant	k_M	3.63	6.98	10.63	14.65	mNm/A
13	Motor Regulation	R/k^2	248.57	247.65	272.02	239.14	10^3/Nms
14	Friction Torque	T_F	0.063 (0.009)	0.063 (0.009)	0.063 (0.009)	0.063 (0.009)	mNm (oz-in)
15	Mechanical Time Constant	τ_m	25.64	25.06	28.22	24.90	ms
16	Rotor Inertia	J	1.03	1.01	1.04	1.04	g-cm²

General Data				
17	Thermal Resistance (rotor/body)	R_{th1}/R_{th2}	7/35	°C/W
18	Thermal Time Constant (rotor/stator)	t_{W1}/t_{W2}	6/380	S
19	Operating Temperature Range:	motor rotor	-30°C to 85°C (-22°F to 185°F) 100°C (212°F)	°C (°F) °C (°F)
20	Shaft Load Max.: (5 mm. from bearing)	 -radial -axial	With sleeve bearings 1.5 (5.39) 100 (359.6)	 N (oz) N (oz)
21	Shaft Play:	-radial -axial	0.03 (0.0012) 0.15 (0.0059)	mm (inch) mm (inch)
22	Weight	g	23 (0.82)	g (oz)

*Also available with ball bearing

Execution Table

Gearbox	Single Shaft	MR2	M Sense B
R16	1	2	Upon Request
B16	3	4	Upon Request
BA16	3	4	Upon Request

Note:
P1: standard commutation
P2: special commutation for double shaft version

No Load Speed vs. Torque

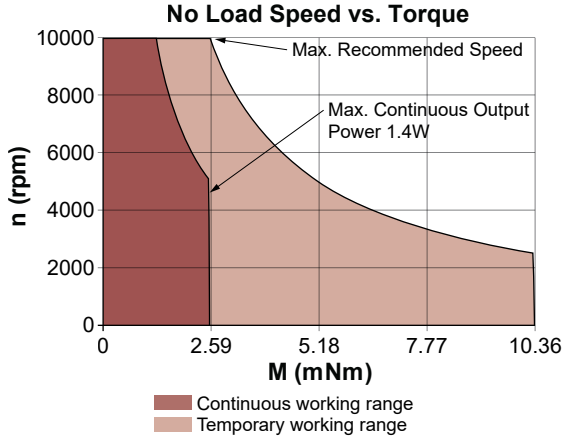

V092018 • © 2018 Portescap. Specifications subject to change without notice.

16DCP Athlonix™

Ø 16 mm • Precious metal commutation • 2.63 mNm

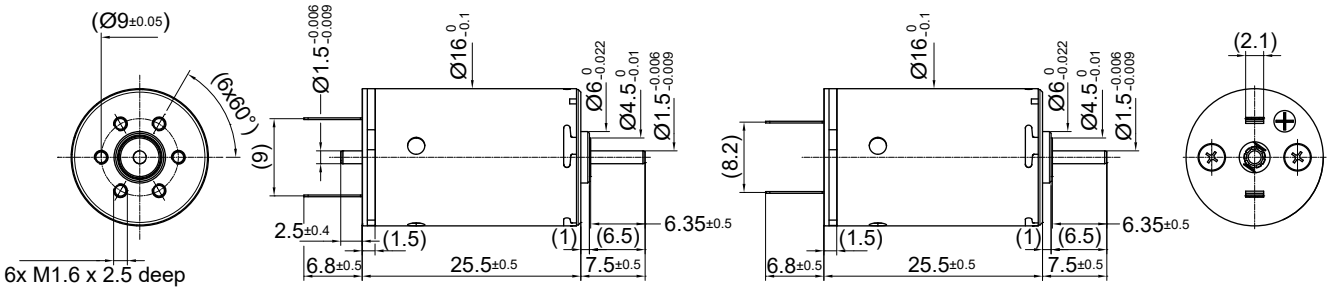

16DCP 26P2 •••• .2

16DCP 26P1 •••• .1

Dimensions in mm.

Electrical Data		Symbol	16DCP 26P1/P2 •••• .* 107P	106P	205E	Unit
1	Nominal Voltage	V	18	21	24	Volt
2	No-Load Speed	n_0	9684	9259	8022	rpm
3	No-Load Current	I_0	4.0	3.3	2.5	mA
4	Terminal Resistance	R	76.0	129.4	208.1	Ω
5	Output Power	$P_{2max.}$	1.4	1.3	1.3	W
6	Stall Torque	mNm	4.06 (0.58)	3.37 (0.48)	3.15 (0.45)	mNm (oz-in)
7	Efficiency	$h_{max.}$	76	73	73	%
8	Max Continuous Speed	$n_{e\ max.}$	10000	10000	10000	rpm
9	Max Continuous Torque	$M_{e\ max.}$	2.57 (0.37)	2.39 (0.34)	2.49 (0.36)	mNm (oz-in)
10	Max Continuous Current	$I_{e\ max.}$	0.15	0.12	0.09	A
11	Back-EMF Constant	k_E	1.83	2.22	2.93	mV/rpm
12	Torque Constant	k_M	17.45	21.21	27.94	mNm/A
13	Motor Regulation	R/k^2	249.78	287.47	266.44	10^3/Nms
14	Friction Torque	T_F	0.063 (0.009)	0.063 (0.009)	0.063 (0.009)	mNm (oz-in)
15	Mechanical Time Constant	τ_m	24.89	24.87	28.14	ms
16	Rotor Inertia	J	1.00	0.87	1.06	g-cm²
General Data						
18	Thermal Resistance (rotor/body)	R_{th1}/R_{th2}	7/35			°C/W
19	Thermal Time Constant (rotor/stator)	t_{W1}/t_{W2}	6/380			S
20	Operating Temperature Range:	motor rotor	-30°C to 85°C (-22°F to 185°F) 100°C (212°F)			°C (°F) °C (°F)
21	Shaft Load Max.: (5 mm. from bearing)	 -radial -axial	With sleeve bearings 1.5 (5.39) 100 (359.6)			 N (oz) N (oz)
22	Shaft Play:	-radial -axial	0.03 (0.0012) 0.15 (0.0059)			mm (inch) mm (inch)
23	Weight	g	23 (0.82)			g (oz)

*Also available with ball bearing

Execution Table

Gearbox	Single Shaft	MR2	M Sense B
R16	1	2	Upon Request
B16	3	4	Upon Request
BA16	3	4	Upon Request

Note:
P1: standard commutation
P2: special commutation for double shaft version

No Load Speed vs. Torque

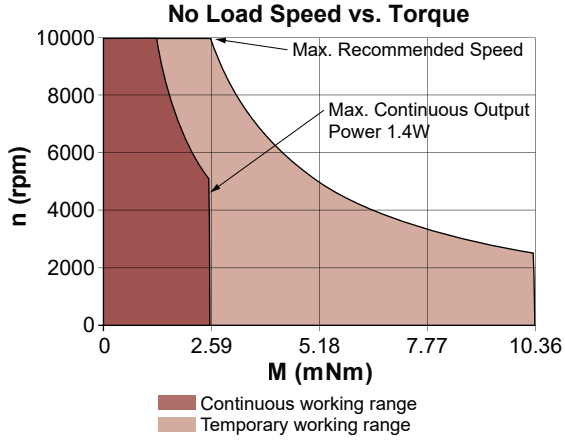

16DCP Athlonix™

Ø 16 mm • Graphite-Copper commutation • 2.42 mNm

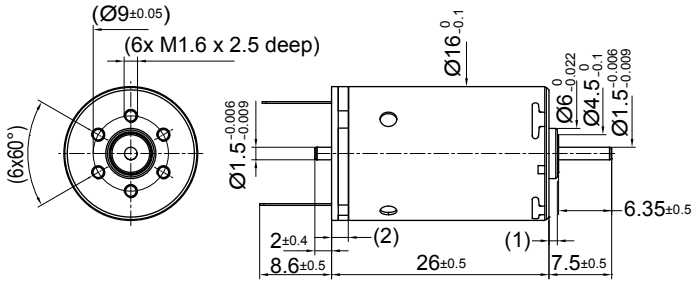

16DCP 26G2 •••• .2

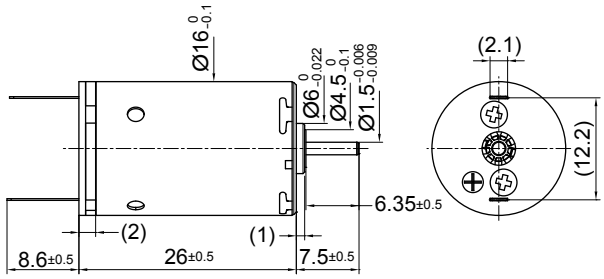

16DCP 26G1 •••• .1

Dimensions in mm.

Electrical Data		Symbol	16DCP 26G1/G2 •••• .* 211P	208P	209E	205P	Unit
1	Nominal Voltage	V	3	6	9	12	Volt
2	No-Load Speed	n_0	7210	7543	7358	7179	rpm
3	No-Load Current	I_0	77.2	40.1	26.3	19.1	mA
4	Terminal Resistance	R	3.4	12.2	30.8	51.5	Ω
5	Output Power	$P_{2max.}$	1.2	1.2	1.2	1.3	W
6	Stall Torque	mNm	2.94 (0.42)	3.16 (0.45)	2.82 (0.4)	3.13 (0.45)	mNm (oz-in)
7	Efficiency	$h_{max.}$	50	51	49	51	%
8	Max Continuous Speed	$n_{e\ max.}$	10000	10000	10000	10000	rpm
9	Max Continuous Torque	$M_{e\ max.}$	2.33 (0.33)	2.36 (0.34)	2.25 (0.32)	2.42 (0.35)	mNm (oz-in)
10	Max Continuous Current	$I_{e\ max.}$	0.72	0.38	0.24	0.18	A
11	Back-EMF Constant	k_E	0.38	0.73	1.11	1.53	mV/rpm
12	Torque Constant	k_M	3.63	6.98	10.63	14.65	mNm/A
13	Motor Regulation	R/k^2	256.16	249.71	272.91	239.61	10^3/Nms
14	Friction Torque	T_F	0.25 (0.035)	0.25 (0.035)	0.25 (0.035)	0.25 (0.035)	mNm (oz-in)
15	Mechanical Time Constant	τ_m	26.42	25.27	28.31	24.95	ms
16	Rotor Inertia	J	1.03	1.01	1.04	1.04	g-cm²

General Data				
18	Thermal Resistance (rotor/body)	R_{th1}/R_{th2}	7/35	°C/W
19	Thermal Time Constant (rotor/stator)	t_{W1}/t_{W2}	6/380	S
20	Operating Temperature Range:	motor rotor	-30°C to 85°C (-22°F to 185°F) 100°C (212°F)	°C (°F) °C (°F)
21	Shaft Load Max.: (5 mm. from bearing)	 -radial -axial	With sleeve bearings 1.5 (5.39) 100 (359.6)	 N (oz) N (oz)
22	Shaft Play:	-radial -axial	0.03 (0.0012) 0.15 (0.0059)	mm (inch) mm (inch)
23	Weight	g	23 (0.82)	g (oz)

*Also available with ball bearing

Execution Table

Gearbox	Single Shaft	MR2	M Sense B
R16	1	2	Upon Request
B16	3	4	Upon Request
BA16	3	4	Upon Request

Note:
G1: standard commutation
G2: special commutation for double shaft version

No Load Speed vs. Torque

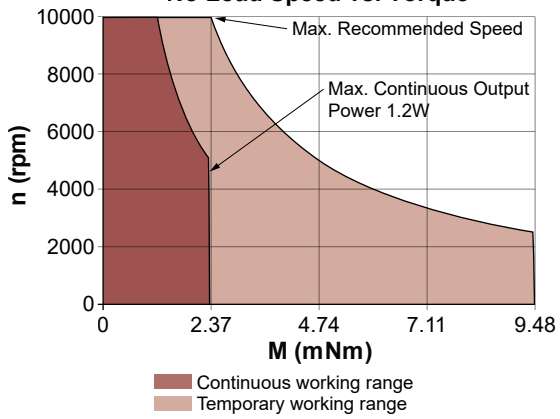

V092018 • © 2018 Portescap. Specifications subject to change without notice.

16DCP Athlonix™

Ø 16 mm • Graphite-Copper commutation • 2.42 mNm

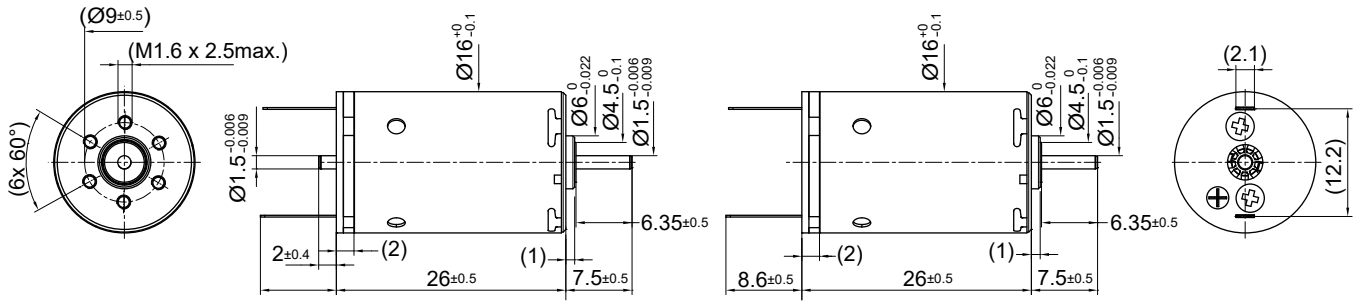

16DCP 26G2 •••• .2 16DCP 26G1 •••• .1

Dimensions in mm.

Electrical Data		Symbol	16DCP 26G1/G2 •••• .* 107P	106P	205E	Unit
1	Nominal Voltage	V	18	21	24	Volt
2	No-Load Speed	n_0	9184	8684	7489	rpm
3	No-Load Current	I_0	16.0	13.2	10.0	mA
4	Terminal Resistance	R	76.1	129.5	208.2	Ω
5	Output Power	$P_{2max.}$	1.2	1.1	1.2	W
6	Stall Torque	mNm	3.84 (0.55)	3.16 (0.45)	2.94 (0.42)	mNm (oz-in)
7	Efficiency	$h_{max.}$	55	51	50	%
8	Max Continuous Speed	$n_{e\ max.}$	10000	10000	10000	rpm
9	Max Continuous Torque	$M_{e\ max.}$	2.36 (0.34)	2.18 (0.31)	2.28 (0.33)	mNm (oz-in)
10	Max Continuous Current	$I_{e\ max.}$	0.15	0.12	0.09	A
11	Back-EMF Constant	k_E	1.83	2.22	2.93	mV/rpm
12	Torque Constant	k_M	17.45	21.21	27.94	mNm/A
13	Motor Regulation	R/k^2	250.11	287.70	266.57	10^3/Nms
14	Friction Torque	T_F	0.25 (0.035)	0.25 (0.035)	0.25 (0.035)	mNm (oz-in)
15	Mechanical Time Constant	τ_m	24.92	24.89	28.15	ms
16	Rotor Inertia	J	1.00	0.87	1.06	g-cm²
General Data						
18	Thermal Resistance (rotor/body)	R_{th1}/R_{th2}	7/35			°C/W
19	Thermal Time Constant (rotor/stator)	t_{W1}/t_{W2}	6/380			S
20	Operating Temperature Range:	motor rotor	-30°C to 85°C (-22°F to 185°F) 100°C (212°F)			°C (°F) °C (°F)
21	Shaft Load Max.: (5 mm. from bearing)	 -radial -axial	With sleeve bearings 1.5 (5.39) 100 (359.6)			 N (oz) N (oz)
22	Shaft Play:	-radial -axial	0.03 (0.0012) 0.15 (0.0059)			mm (inch) mm (inch)
23	Weight	g	23 (0.82)			g (oz)

*Also available with ball bearing

Execution Table

Gearbox	Single Shaft	MR2	M Sense B
R16	1	2	Upon Request
B16	3	4	Upon Request
BA16	3	4	Upon Request

Note:
G1: standard commutation
G2: special commutation for double shaft version

No Load Speed vs. Torque

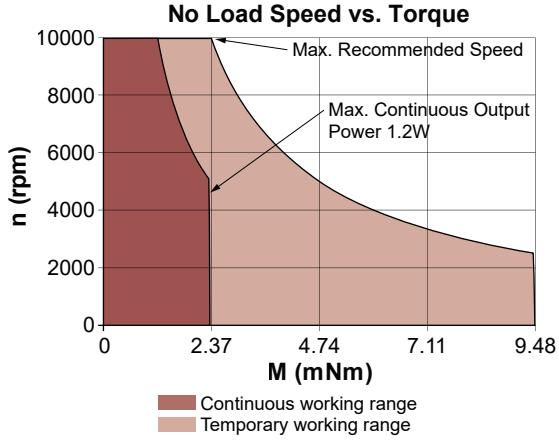

16DCT Athlonix™

Ø 16 mm • Precious metal commutation • 5.45 mNm

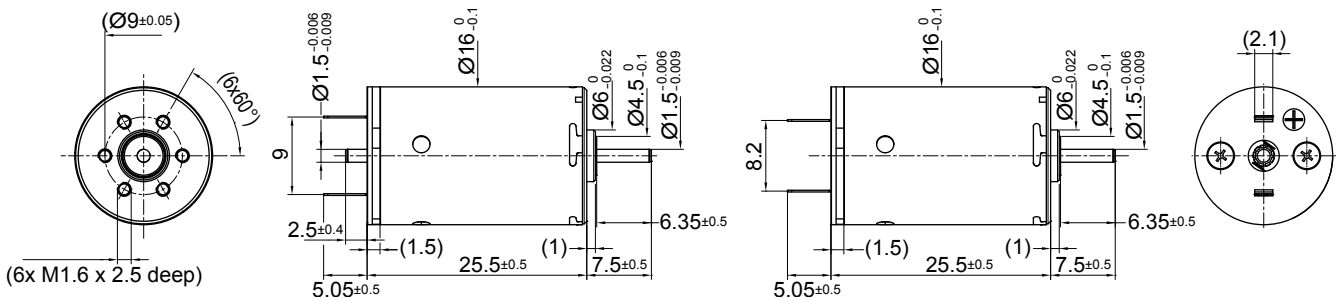

16DCT 26P2 •••• .2 16DCT 26P1 •••• .1

Dimensions in mm.

Electrical Data		Symbol	16DCT 26P1/P2 •••• .* 219P	219E	213E	211E	207P	Unit
1	Nominal Voltage	V	3	6	9	12	15	Volt
2	No-Load Speed	n_0	8081	8600	7970	7968	8599	rpm
3	No-Load Current	I_0	28.6	15.2	9.4	7.1	6.1	mA
4	Terminal Resistance	R	0.7	2.3	7.5	13.8	18.6	Ω
5	Output Power	$P_{2max.}$	4.2	4.2	4.2	4.1	4.1	W
6	Stall Torque	mNm	16.12 (2.29)	17.13 (2.43)	12.77 (1.81)	12.33 (1.75)	13.21 (1.88)	mNm (oz-in)
7	Efficiency	$h_{max.}$	85	85	83	83	83	%
8	Max Continuous Speed	$n_{e\ max.}$	10000	10000	10000	10000	10000	rpm
9	Max Continuous Torque	$M_{e\ max.}$	5.28 (0.75)	5.27 (0.75)	5.36 (0.76)	5.27 (0.75)	5.25 (0.75)	mNm (oz-in)
10	Max Continuous Current	$I_{e\ max.}$	1.53	0.81	0.51	0.38	0.32	A
11	Back-EMF Constant	k_E	0.37	0.69	1.12	1.49	1.73	mV/rpm
12	Torque Constant	k_M	3.52	6.62	10.70	14.27	16.53	mNm/A
13	Motor Regulation	R/k^2	52.47	52.55	65.35	67.66	68.15	10^3/Nms
14	Friction Torque	T_F	0.08 (0.011)	0.08 (0.011)	0.08 (0.011)	0.08 (0.011)	0.08 (0.011)	mNm (oz-in)
15	Mechanical Time Constant	τ_m	7.79	7.80	7.56	7.51	6.63	ms
16	Rotor Inertia	J	1.48	1.48	1.16	1.11	0.97	g-cm²

General Data				
18	Thermal Resistance (rotor/body)	R_{th1}/R_{th2}	7/35	°C/W
19	Thermal Time Constant (rotor/stator)	t_{W1}/t_{W2}	6/380	S
20	Operating Temperature Range:	motor	-30°C to 85°C (-22°F to 185°F)	°C (°F)
		rotor	100°C (212°F)	°C (°F)
21	Shaft Load Max.:		With sleeve bearings	
	(5 mm. from bearing)	-radial	1.5 (5.39)	N (oz)
		-axial	100 (359.6)	N (oz)
22	Shaft Play:	-radial	0.03 (0.0012)	mm (inch)
		-axial	0.15 (0.0059)	mm (inch)
23	Weight	g	23 (0.82)	g (oz)

*Also available with ball bearing

Execution Table

Gearbox	Single Shaft	MR2	M Sense B
R16	1	2	Upon Request
B16	3	4	Upon Request
BA16	3	4	Upon Request

Note:
P1: standard commutation
P2: special commutation for double shaft version
*Special Ball bearing system available for high radial load requirements

No Load Speed vs. Torque

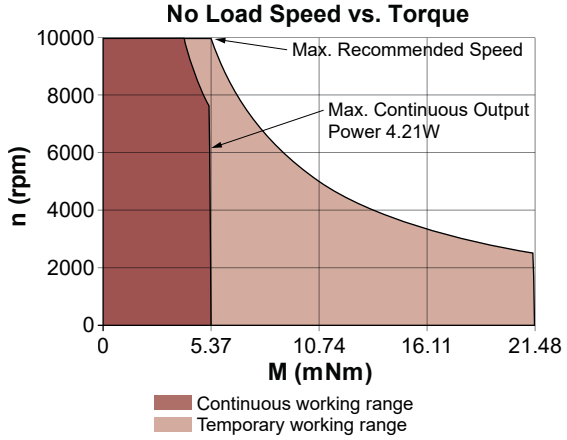

V092018 • © 2018 Portescap. Specifications subject to change without notice.

16DCT Athlonix™

Ø 16 mm • Precious metal commutation • 5.45 mNm

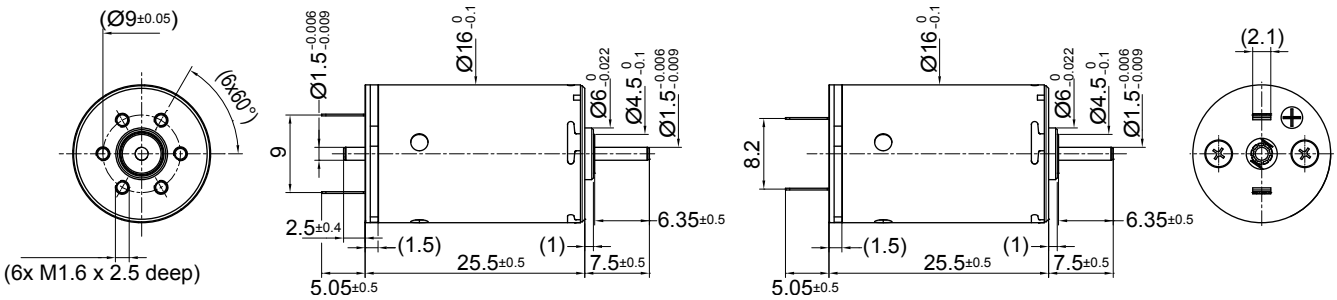

16DCT 26P2 •••• .2

16DCT 26P1 •••• .1

Dimensions in mm.

Electrical Data		Symbol	16DCT 26P1/P2 •••• .* 209E	205P	207E	205E	Unit
1	Nominal Voltage	V	18	24	36	48	Volt
2	No-Load Speed	n_0	8261	7993	10079	8380	rpm
3	No-Load Current	I_0	4.9	3.5	3.0	1.9	mA
4	Terminal Resistance	R	30.7	51.4	80.9	208.1	Ω
5	Output Power	$P_{2max.}$	4.0	4.3	4.1	4.1	W
6	Stall Torque	mNm	11.99 (1.7)	13.2 (1.87)	14.97 (2.13)	12.41 (1.76)	mNm (oz-in)
7	Efficiency	$h_{max.}$	83	83	84	83	%
8	Max Continuous Speed	$n_{e\ max.}$	10000	10000	10000	10000	rpm
9	Max Continuous Torque	$M_{e\ max.}$	5.1 (0.73)	5.45 (0.78)	5.16 (0.74)	5.15 (0.73)	mNm (oz-in)
10	Max Continuous Current	$I_{e\ max.}$	0.25	0.19	0.16	0.10	A
11	Back-EMF Constant	k_E	2.16	2.98	3.55	5.68	mV/rpm
12	Torque Constant	k_M	20.63	28.46	33.88	54.26	mNm/A
13	Motor Regulation	R/k^2	72.15	63.00	70.46	70.67	10^3/Nms
14	Friction Torque	T_F	0.08 (0.011)	0.08 (0.011)	0.08 (0.011)	0.08 (0.011)	mNm (oz-in)
15	Mechanical Time Constant	τ_m	7.48	6.60	7.47	7.46	ms
16	Rotor Inertia	J	1.04	1.04	1.06	1.06	g-cm²

General Data				
18	Thermal Resistance (rotor/body)	R_{th1}/R_{th2}	7/35	°C/W
19	Thermal Time Constant (rotor/stator)	t_{W1}/t_{W2}	6/380	S
20	Operating Temperature Range:	motor rotor	-30°C to 85°C (-22°F to 185°F) 100°C (212°F)	°C (°F) °C (°F)
21	Shaft Load Max.: (5 mm. from bearing)	 -radial -axial	With sleeve bearings 1.5 (5.39) 100 (359.6)	 N (oz) N (oz)
22	Shaft Play:	-radial -axial	0.03 (0.0012) 0.15 (0.0059)	mm (inch) mm (inch)
23	Weight	g	23 (0.82)	g (oz)

*Also available with ball bearing

Execution Table

Gearbox	Single Shaft	MR2	M Sense B
R16	1	2	Upon Request
B16	3	4	Upon Request
BA16	3	4	Upon Request

Note:
P1: standard commutation
P2: special commutation for double shaft version
*Special Ball bearing system available for high radial load requirements

No Load Speed vs. Torque

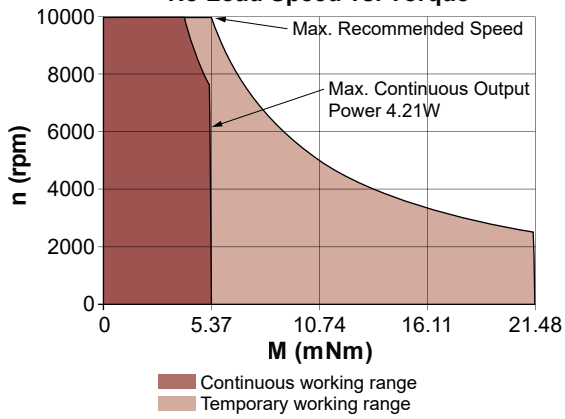

16DCT Athlonix™

Ø 16 mm • Graphite-Copper commutation • 5.06 mNm

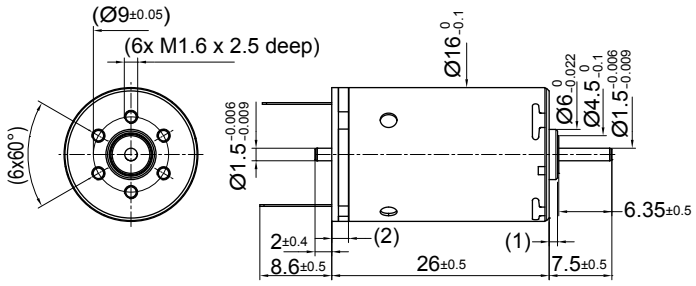

16DCT 26G2 •••• .2

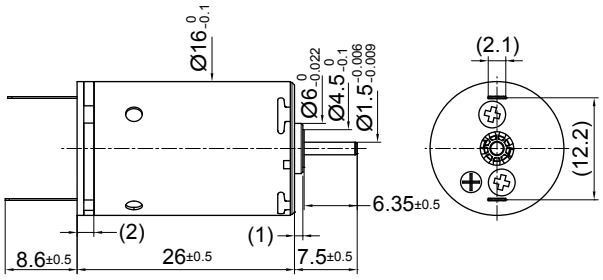

16DCT 26G1 •••• .1

Dimensions in mm.

Electrical Data		Symbol	16DCT 26G1/G2 •••• .*					Unit
			220P	213P	215E	213E	211E	
1	Nominal Voltage	V	3	6	9	12	15	Volt
2	No-Load Speed	n_0	9311	9798	9648	10427	9749	rpm
3	No-Load Current	I_0	150.3	78.7	51.7	41.9	31.4	mA
4	Terminal Resistance	R	0.6	2.0	4.8	7.6	13.9	Ω
5	Output Power	$P_{2max.}$	3.3	3.5	4.0	3.9	3.9	W
6	Stall Torque	mNm	13.95 (1.98)	16.24 (2.3)	15.7 (2.23)	16.48 (2.34)	14.98 (2.13)	mNm (oz-in)
7	Efficiency	$h_{max.}$	68	70	69	70	69	%
8	Max Continuous Speed	$n_{e\ max.}$	10000	10000	10000	10000	10000	rpm
9	Max Continuous Torque	$M_{e\ max.}$	4.21 (0.6)	4.45 (0.64)	5.06 (0.72)	4.98 (0.71)	4.9 (0.7)	mNm (oz-in)
10	Max Continuous Current	$I_{e\ max.}$	1.56	0.86	0.64	0.51	0.38	A
11	Back-EMF Constant	k_E	0.31	0.60	0.91	1.12	1.49	mV/rpm
12	Torque Constant	k_M	2.98	5.69	8.66	10.70	14.27	mNm/A
13	Motor Regulation	R/k^2	69.88	63.14	64.34	66.22	68.15	10^3/Nms
14	Friction Torque	T_F	0.3 (0.042)	0.3 (0.042)	0.3 (0.042)	0.3 (0.042)	0.3 (0.042)	mNm (oz-in)
15	Mechanical Time Constant	τ_m	9.72	7.31	7.78	7.66	7.57	ms
16	Rotor Inertia	J	1.39	1.16	1.21	1.16	1.11	g-cm²

General Data				
18	Thermal Resistance (rotor/body)	R_{th1}/R_{th2}	7/35	°C/W
19	Thermal Time Constant (rotor/stator)	t_{W1}/t_{W2}	6/380	S
20	Operating Temperature Range:	motor rotor	-30°C to 85°C (-22°F to 185°F) 100°C (212°F)	°C (°F) °C (°F)
21	Shaft Load Max.: (5 mm. from bearing)	 -radial -axial	With sleeve bearings 1.5 (5.39) 100 (359.6)	 N (oz) N (oz)
22	Shaft Play:	-radial -axial	0.03 (0.0012) 0.15 (0.0059)	mm (inch) mm (inch)
23	Weight	g	23 (0.82)	g (oz)

*Also available with ball bearing

Execution Table

Gearbox	Single Shaft	MR2	M Sense B
R16	1	2	Upon Request
B16	3	4	Upon Request
BA16	3	4	Upon Request

Note:
G1: standard commutation
G2: special commutation for double shaft version
*Special Ball bearing system available for high radial load requirements

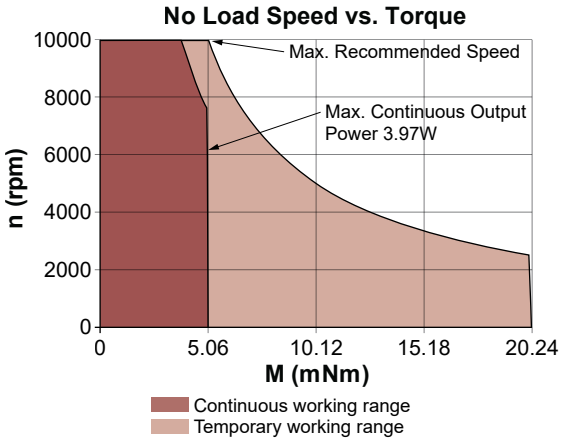

V092018 • © 2018 Portescap. Specifications subject to change without notice.

16DCT Athlonix™

Ø 16 mm • Graphite-Copper commutation • 5.06 mNm

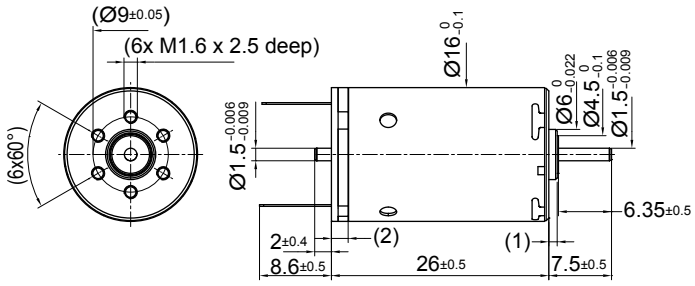

16DCT 26G2 •••• .2

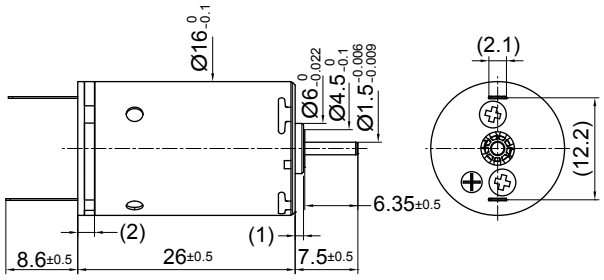

16DCT 26G1 •••• .1

Dimensions in mm.

Electrical Data		Symbol	16DCT 26G1/G2 •••• .* 207P	209F	207E	205E	Unit
1	Nominal Voltage	V	18	24	36	48	Volt
2	No-Load Speed	n_0	10105	10053	9845	8145	rpm
3	No-Load Current	I_0	27.1	20.2	13.2	8.3	mA
4	Terminal Resistance	R	18.7	33.1	81.0	208.2	Ω
5	Output Power	$P_{2max.}$	3.8	3.9	3.8	3.8	W
6	Stall Torque	mNm	15.44 (2.19)	15.62 (2.22)	14.61 (2.07)	12.06 (1.71)	mNm (oz-in)
7	Efficiency	$h_{max.}$	69	69	68	66	%
8	Max Continuous Speed	$n_{e\ max.}$	10000	10000	10000	10000	rpm
9	Max Continuous Torque	$M_{e\ max.}$	4.89 (0.7)	4.93 (0.7)	4.81 (0.69)	4.8 (0.68)	mNm (oz-in)
10	Max Continuous Current	$I_{e\ max.}$	0.32	0.24	0.16	0.10	A
11	Back-EMF Constant	k_E	1.73	2.32	3.55	5.68	mV/rpm
12	Torque Constant	k_M	16.53	22.16	33.88	54.26	mNm/A
13	Motor Regulation	R/k^2	69.00	67.36	70.55	70.70	10^3/Nms
14	Friction Torque	T_F	0.3 (0.042)	0.3 (0.042)	0.3 (0.042)	0.3 (0.042)	mNm (oz-in)
15	Mechanical Time Constant	τ_m	6.66	7.51	7.48	7.47	ms
16	Rotor Inertia	J	0.97	1.11	1.06	1.06	g-cm²

General Data				
18	Thermal Resistance (rotor/body)	R_{th1}/R_{th2}	7/35	°C/W
19	Thermal Time Constant (rotor/stator)	t_{W1}/t_{W2}	6/380	S
20	Operating Temperature Range:	motor rotor	-30°C to 85°C (-22°F to 185°F) 100°C (212°F)	°C (°F) °C (°F)
21	Shaft Load Max.: (5 mm. from bearing)		With sleeve bearings	
		-radial	1.5 (5.39)	N (oz)
		-axial	100 (359.6)	N (oz)
22	Shaft Play:	-radial -axial	0.03 (0.0012) 0.15 (0.0059)	mm (inch) mm (inch)
23	Weight	g	23 (0.82)	g (oz)

*Also available with ball bearing

Execution Table

Gearbox	Single Shaft	MR2	M Sense B
R16	1	2	Upon Request
B16	3	4	Upon Request
BA16	3	4	Upon Request

Note:
G1: standard commutation
G2: special commutation for double shaft version
*Special Ball bearing system available for high radial load requirements

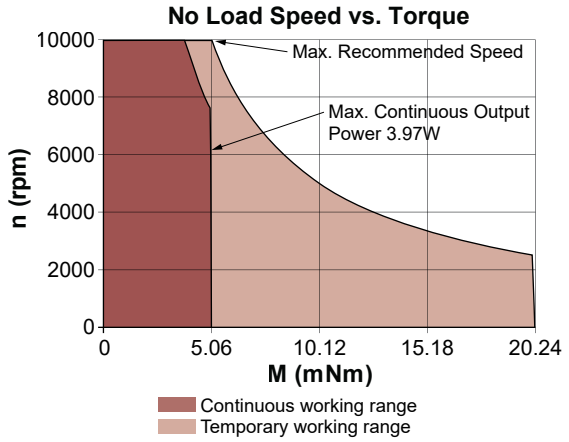

16G88

Ø 16 mm • Precious metal commutation • 5.8 mNm

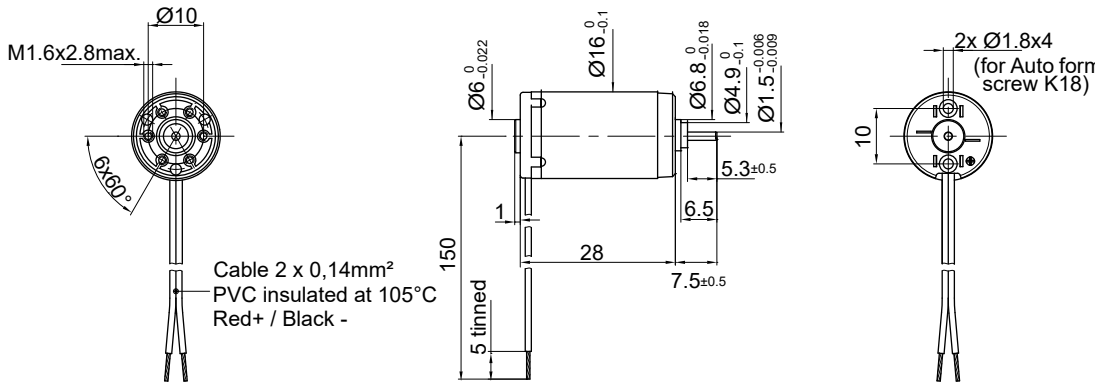

Dimensions in mm.

Electrical Data		Symbol	16G88 •••• .1						Unit
			220P	214E	213E	211E	210E	205E	
1	Nominal Voltage	V	3	8	9	12	15	32	Volt
2	No-Load Speed	n_0	11,025	9,250	7,980	8,690	9,000	8,150	rpm
3	No-Load Current	I_0	45.0	10.0	8.0	6.5	5.5	2.0	mA
4	Terminal Resistance	R	0.5	5.4	7.6	13.0	19.5	135.0	Ω
5	Output Power	$P_{2max.}$	4.1	4.2	4.6	4.2	4.2	2.5	W
6	Stall Torque	mNm	16 (2.27)	12.1 (1.72)	12.7 (1.8)	12.1 (1.72)	12.2 (1.73)	8.8 (1.25)	mNm (oz-in)
7	Efficiency	$h_{max.}$	83	84	84	84	84	82	%
8	Max Continuous Speed	$n_{e\ max.}$	10,000	10,000	10,000	10,000	10,000	10,000	rpm
9	Max Continuous Torque	$M_{e\ max.}$	5.5 (0.76)	5.3 (0.76)	5.8 (0.83)	5.4 (0.77)	5.4 (0.77)	4.8 (0.68)	mNm (oz-in)
10	Max Continuous Current	$I_{e\ max.}$	2.20	0.66	0.55	0.42	0.35	0.13	A
11	Back-EMF Constant	k_E	0.27	0.86	1.12	1.37	1.65	3.90	mV/rpm
12	Torque Constant	k_M	2.58	8.20	10.70	13.10	15.80	37.20	mNm/A
13	Motor Regulation	R/k^2	75.1	80.3	66.4	75.75	78.11	97.55	10^3/Nms
14	Friction Torque	T_F	0.12 (0.02)	0.08 (0.02)	0.09 (0.02)	0.09 (0.02)	0.09 (0.02)	0.07 (0.01)	mNm (oz-in)
15	Rotor Inductance	L	0.01	0.12	0.15	0.26	0.40	1.70	mH
16	Mechanical Time Constant	τ_m	6.0	6.4	5.3	6.1	5.8	7.8	ms
17	Rotor Inertia	J	0.80	0.80	0.80	0.80	0.74	0.80	g-cm²

General Data				
18	Thermal Resistance (rotor/body)	R_{th1}/R_{th2}	8/35	°C/W
19	Thermal Time Constant (rotor/stator)	t_{W1}/t_{W2}	6/500	S
20	Operating Temperature Range:	motor rotor	-30°C to 85°C (-22°F to 185°F) 100°C (212°F)	°C (°F) °C (°F)
21	Shaft Load Max.: (5 mm. from bearing)	 -radial -axial	With sleeve bearings 1.5 (5.4) 100 (359.6)	 N (oz) N (oz)
22	Shaft Play:	-radial -axial	<0.03 (0.0012) 0.15 (0.0059)	mm (inch) mm (inch)
23	Weight	g	24 (0.85)	g (oz)

Execution Table

Gearbox	Single Shaft	MR2
B16	5	Upon Request
BA16	5	Upon Request
R16	1	Upon Request

No Load Speed vs. Torque

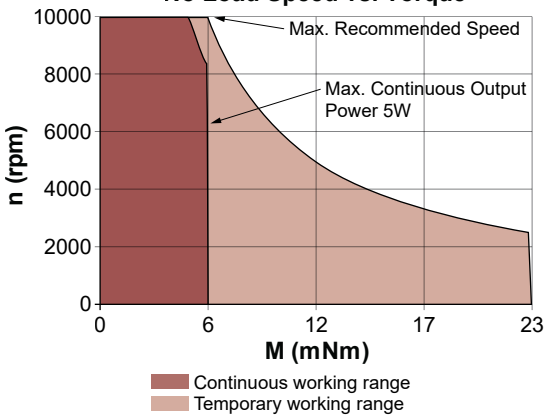

V092018 • © 2018 Portescap. Specifications subject to change without notice.

16N78 Athlonix™

Ø 16 mm • Precious metal commutation • 6.9 mNm

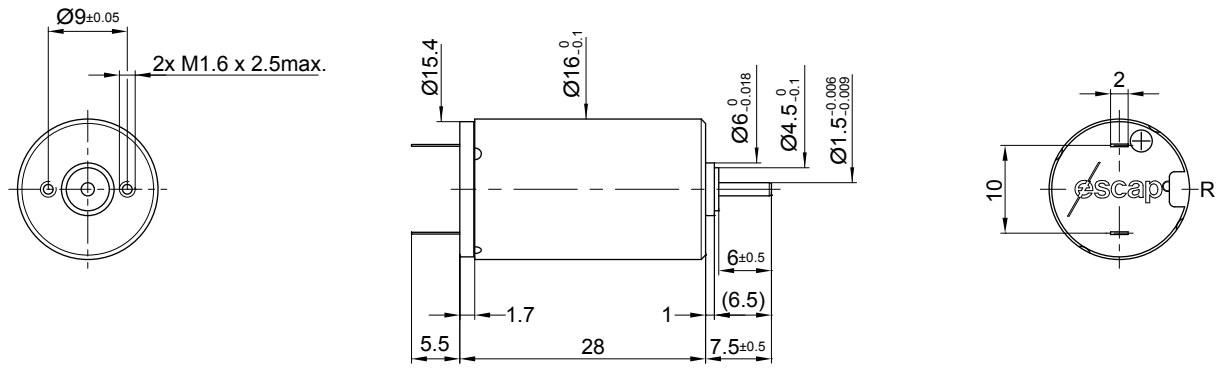

Dimensions in mm.

Electrical Data	Symbol	16N78 •••• .1001						Unit
		135	212P	214E	212E	210E	208E	
1 Nominal Voltage	V	1.5	6	9	12	18	24	Volt
2 No-Load Speed	n_0	7,894	8,350	8,275	8,380	8,530	8,200	rpm
3 No-Load Current	I_0	90.0	18.0	10.0	5.0	5.0	4.0	mA
4 Terminal Resistance	R	0.2	3.0	7.5	13.2	27.5	60.5	Ω
5 Output Power	$P_{2max.}$	4.7	5.4	5.2	5.2	4.9	4.9	W
6 Stall Torque	mNm	13.5 (1.91)	13.6 (1.93)	12.4 (1.76)	12.4 (1.76)	13.1 (1.86)	11 (1.56)	mNm (oz-in)
7 Efficiency	$h_{max.}$	83	82	83	86	83	81	%
8 Max Continuous Speed	$n_{e\ max.}$	10,000	10,000	10,000	10,000	10,000	10,000	rpm
9 Max Continuous Torque	$M_{e\ max.}$	6 (0.98)	6.9 (0.98)	6.6 (0.94)	6.6 (0.94)	6.2 (0.88)	6.3 (0.9)	mNm (oz-in)
10 Max Continuous Current	$I_{e\ max.}$	3.41	1.03	0.65	0.49	0.34	0.23	A
11 Back-EMF Constant	k_E	0.19	0.71	1.08	1.42	2.09	2.90	mV/rpm
12 Torque Constant	k_M	1.80	6.80	10.30	13.60	20.00	27.70	mNm/A
13 Motor Regulation	R/k^2	62.0	64.9	70.7	71.37	69.0	78.85	10^3/Nms
14 Friction Torque	T_F	0.09 (0.02)	0.12 (0.02)	0.1 (0.02)	0.07 (0.01)	0.09 (0.02)	0.08 (0.02)	mNm (oz-in)
15 Rotor Inductance	L	0.01	0.10	0.30	0.50	1.00	2.40	mH
16 Mechanical Time Constant	τ_m	6.8	6.8	8.8	8.6	8.3	9.3	ms
17 Rotor Inertia	J	1.10	1.05	1.25	1.20	1.20	1.18	g-cm²

General Data			
18 Thermal Resistance (rotor/body)	R_{th1}/R_{th2}	6/25	°C/W
19 Thermal Time Constant (rotor/stator)	t_{W1}/t_{W2}	12/250	S
20 Operating Temperature Range:	motor rotor	-30°C to 85°C (-22°F to 185°F) 100°C (212°F)	°C (°F) °C (°F)
21 Shaft Load Max.: (5 mm. from bearing)	 -radial -axial	With sleeve bearings 1.5 (5.4) 100 (359.6)	 N (oz) N (oz)
22 Shaft Play:	-radial -axial	<0.03 (0.0012) 0.15 (0.0059)	mm (inch) mm (inch)
23 Weight	g	24 (0.85)	g (oz)

Execution Table

Gearbox	Single Shaft	MR2
B16	1005	1008
BA16	1005	1008
R16	1001	1007

No Load Speed vs. Torque

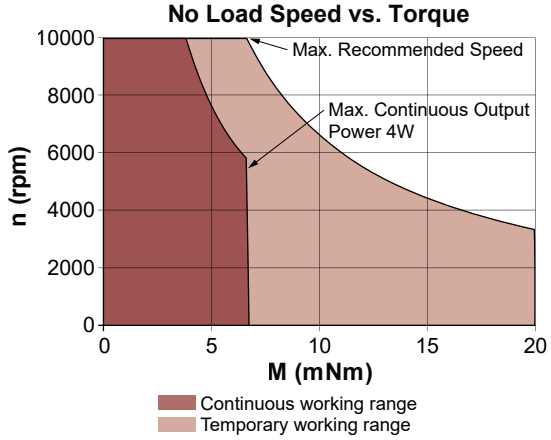

16S78 Athlonix™

Ø 16 mm • Precious metal commutation • 2.8 mNm

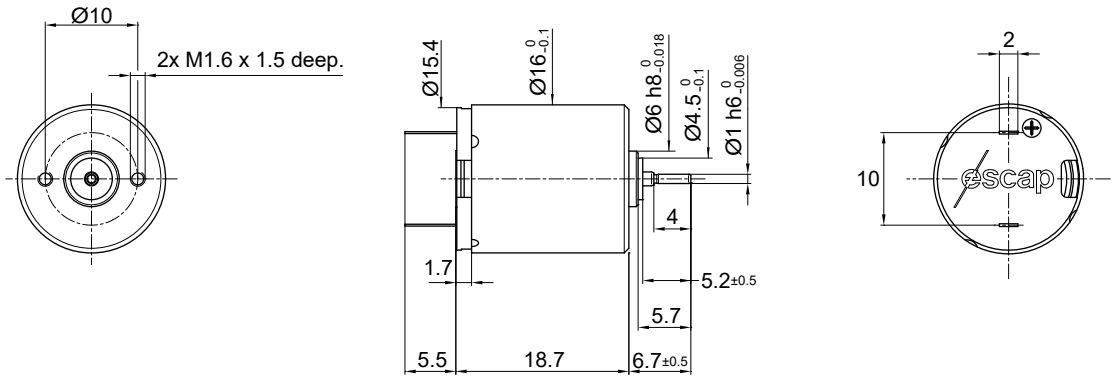

Dimensions in mm.

Electrical Data	Symbol	16S78 •••• .1 208P	16S78 •••• .1 210E	Unit
1 Nominal Voltage	V	6	7.5	Volt
2 No-Load Speed	n_0	10,280	10,865	rpm
3 No-Load Current	I_0	25.0	18.0	mA
4 Terminal Resistance	R	7.5	12.2	Ω
5 Output Power	$P_{2max.}$	1.7	1.6	W
6 Stall Torque	mNm	4.3	3.9	mNm (oz-in)
7 Efficiency	$h_{max.}$	68	69	%
8 Max Continuous Speed	$n_{e\ max.}$	10,000	10,000	rpm
9 Max Continuous Torque	$M_{e\ max.}$	2.6 (0.34)	2.4 (0.34)	mNm (oz-in)
10 Max Continuous Current	$I_{e\ max.}$	0.50	0.38	A
11 Back-EMF Constant	k_E	0.57	0.67	mV/rpm
12 Torque Constant	k_M	5.40	6.40	mNm/A
13 Motor Regulation	R/k^2	255.0	300.0	10^3/Nms
14 Friction Torque	T_F	0.12 (0.02)	0.12 (0.02)	mNm (oz-in)
15 Rotor Inductance	L	0.15	0.23	mH
16 Mechanical Time Constant	τ_m	12.8	15.0	ms
17 Rotor Inertia	J	0.50	0.50	g-cm²
General Data				
18 Thermal Resistance (rotor/body)	R_{th1}/R_{th2}	13/38		°C/W
19 Thermal Time Constant (rotor/stator)	t_{W1}/t_{W2}	7/400		S
20 Operating Temperature Range:	motor rotor	-30°C to 85°C (-22°F to 185°F) 100°C (212°F)		°C (°F) °C (°F)
21 Shaft Load Max.: (5 mm. from bearing)	 -radial -axial	With sleeve bearings 1.5 (5.4) 100 (359.6)		 N (oz) N (oz)
22 Shaft Play:	-radial -axial	<0.03 (0.0012) 0.15 (0.0059)		mm (inch) mm (inch)
23 Weight	g	19 (0.68)		g (oz)

Execution Table

Gearbox	Single Shaft	MR2
B16	2	3
BA16	2	3
R16	2	3

No Load Speed vs. Torque

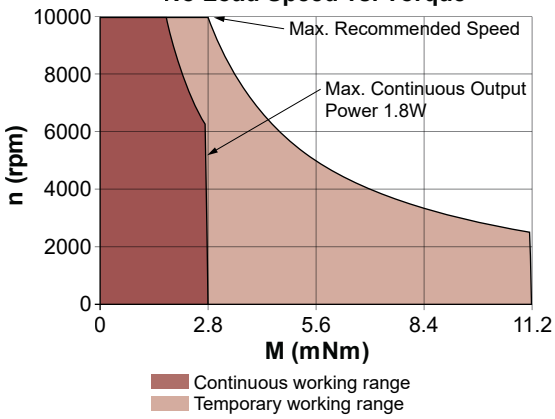

V092018 • © 2018 Portescap. Specifications subject to change without notice.

17DCT Athlonix™

Ø 17 mm • Precious metal commutation • 6.14 mNm

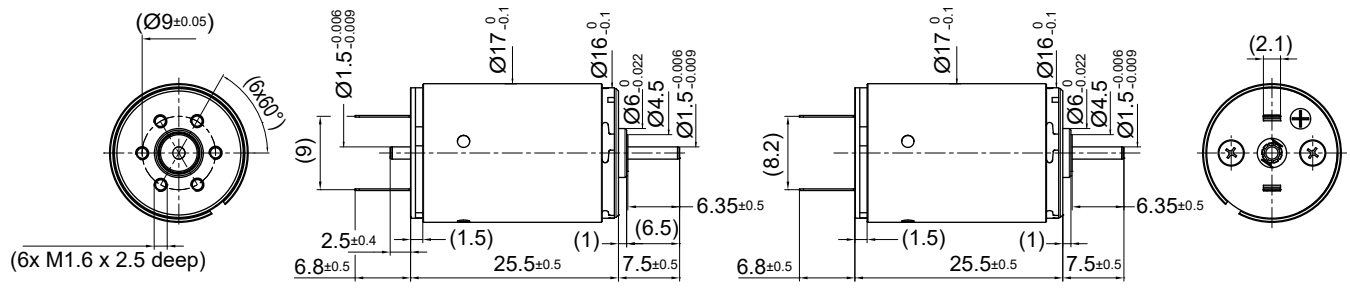

17DCT 26P2 •••• .2

17DCT 26P1 •••• .1

Dimensions in mm.

Electrical Data		Symbol	17DCT 26P1/P2 •••• .*					Unit
			216P	211P	209P	208P	207P	
1	Nominal Voltage	V	3	6	9	12	15	Volt
2	No-Load Speed	n_0	7838	7842	7645	8158	8358	rpm
3	No-Load Current	I_0	24.7	12.3	8.0	6.4	5.3	mA
4	Terminal Resistance	R	0.9	3.3	7.7	12.1	18.6	Ω
5	Output Power	$P_{2max.}$	4.6	4.7	4.8	4.7	4.7	W
6	Stall Torque	mNm	12.31 (1.75)	13.21 (1.88)	13.02 (1.85)	13.79 (1.96)	13.62 (1.93)	mNm (oz-in)
7	Efficiency	$h_{max.}$	84	84	84	85	84	%
8	Max Continuous Speed	$n_{e\ max.}$	10000	10000	10000	10000	10000	rpm
9	Max Continuous Torque	$M_{e\ max.}$	5.81 (0.83)	6.02 (0.86)	6.05 (0.86)	6.03 (0.86)	5.92 (0.84)	mNm (oz-in)
10	Max Continuous Current	$I_{e\ max.}$	1.63	0.84	0.55	0.44	0.35	A
11	Back-EMF Constant	k_E	0.38	0.76	1.17	1.46	1.78	mV/rpm
12	Torque Constant	k_M	3.63	7.26	11.16	13.96	17.03	mNm/A
13	Motor Regulation	R/k^2	66.64	62.15	61.45	61.92	64.25	10^3/Nms
14	Friction Torque	T_F	0.08 (0.011)	0.08 (0.011)	0.08 (0.011)	0.08 (0.011)	0.08 (0.011)	mNm (oz-in)
15	Mechanical Time Constant	τ_m	7.01	6.41	6.30	6.27	6.25	ms
16	Rotor Inertia	J	1.05	1.03	1.02	1.01	0.97	g-cm²

General Data				
18	Thermal Resistance (rotor/body)	R_{th1}/R_{th2}	6/25	°C/W
19	Thermal Time Constant (rotor/stator)	t_{W1}/t_{W2}	12/250	S
20	Operating Temperature Range:	motor rotor	-30°C to 85°C (-22°F to 185°F) 100°C (212°F)	°C (°F) °C (°F)
21	Shaft Load Max.: (5 mm. from bearing)	 -radial -axial	With sleeve bearings 1.5 (5.39) 100 (359.6)	 N (oz) N (oz)
22	Shaft Play:	-radial -axial	0.03 (0.0012) 0.15 (0.0059)	mm (inch) mm (inch)
23	Weight	g	27 (0.96)	g (oz)

*Also available with ball bearing

Execution Table

Gearbox	Single Shaft	MR2	M Sense B
R16	1	2	Upon Request
B16	3	4	Upon Request
BA16	3	4	Upon Request

Note:
P1: standard commutation
P2: special commutation for double shaft version

No Load Speed vs. Torque

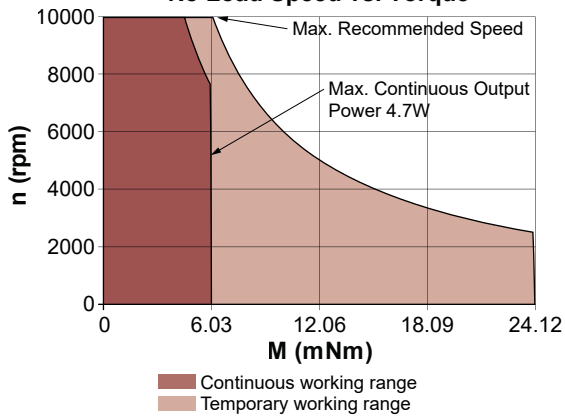

17DCT Athlonix™

Ø 17 mm • Precious metal commutation • 6.14 mNm

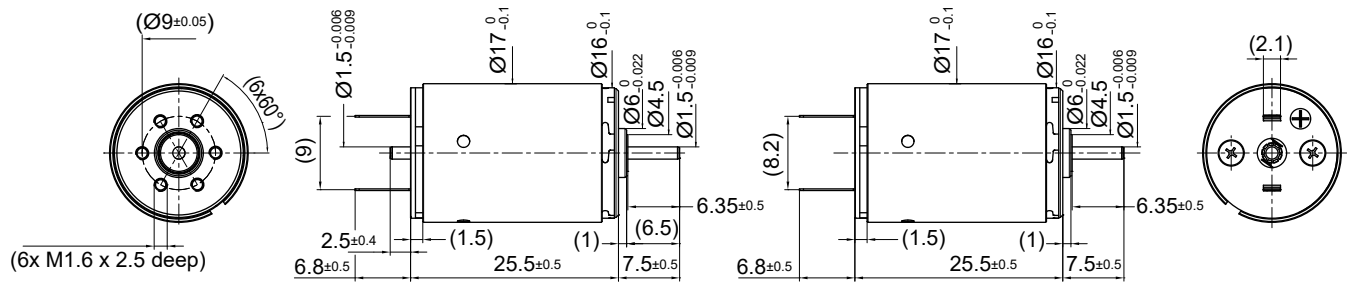

17DCT 26P2 •••• .2 17DCT 26P1 •••• .1

Dimensions in mm.

Electrical Data	Symbol	17DCT 26P1/P2 •••• .* 209E	205P	107P	205E	Unit
1 Nominal Voltage	V	18	24	36	48	Volt
2 No-Load Speed	n_0	8030	7769	9800	8145	rpm
3 No-Load Current	I_0	4.2	3.1	2.6	1.6	mA
4 Terminal Resistance	R	30.7	51.4	76.0	208.1	Ω
5 Output Power	$P_{2max.}$	4.5	4.8	4.7	4.6	W
6 Stall Torque	mNm	12.36 (1.76)	13.6 (1.93)	16.43 (2.33)	12.8 (1.82)	mNm (oz-in)
7 Efficiency	$h_{max.}$	84	84	86	84	%
8 Max Continuous Speed	$n_{e\ max.}$	10000	10000	10000	10000	rpm
9 Max Continuous Torque	$M_{e\ max.}$	5.75 (0.82)	6.14 (0.87)	6 (0.85)	5.8 (0.83)	mNm (oz-in)
10 Max Continuous Current	$I_{e\ max.}$	0.27	0.21	0.17	0.11	A
11 Back-EMF Constant	k_E	2.23	3.07	3.65	5.85	mV/rpm
12 Torque Constant	k_M	21.25	29.31	34.89	55.88	mNm/A
13 Motor Regulation	R/k^2	68.01	59.79	62.45	66.62	10^3/Nms
14 Friction Torque	T_F	0.08 (0.011)	0.08 (0.011)	0.08 (0.011)	0.08 (0.011)	mNm (oz-in)
15 Mechanical Time Constant	τ_m	7.06	6.23	6.22	7.04	ms
16 Rotor Inertia	J	1.04	1.04	1.00	1.06	g-cm²

General Data			
18 Thermal Resistance (rotor/body)	R_{th1}/R_{th2}	6/25	°C/W
19 Thermal Time Constant (rotor/stator)	t_{W1}/t_{W2}	12/250	S
20 Operating Temperature Range:	motor rotor	-30°C to 85°C (-22°F to 185°F) 100°C (212°F)	°C (°F) °C (°F)
21 Shaft Load Max.: (5 mm. from bearing)	 -radial -axial	With sleeve bearings 1.5 (5.39) 100 (359.6)	 N (oz) N (oz)
22 Shaft Play:	-radial -axial	0.03 (0.0012) 0.15 (0.0059)	mm (inch) mm (inch)
23 Weight	g	27 (0.96)	g (oz)

*Also available with ball bearing

Execution Table

Gearbox	Single Shaft	MR2	M Sense B
R16	1	2	Upon Request
B16	3	4	Upon Request
BA16	3	4	Upon Request

Note:
P1: standard commutation
P2: special commutation for double shaft version

No Load Speed vs. Torque

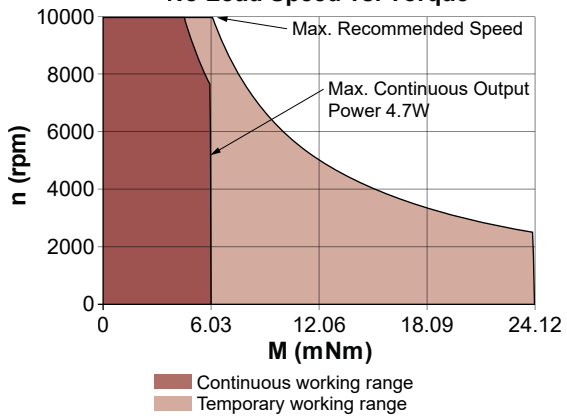

V092018 • © 2018 Portescap. Specifications subject to change without notice.

17DCT Athlonix™

Ø 17 mm • Graphite-Copper commutation • 5.88 mNm

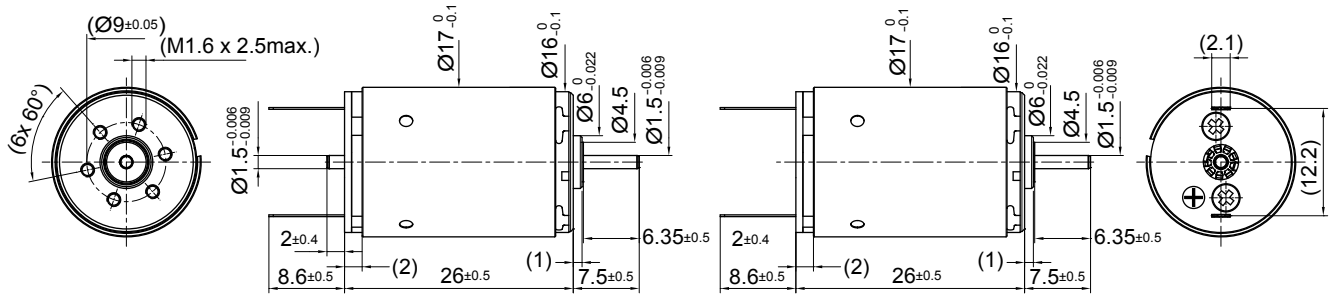

17DCT 26G2 •••• .2 17DCT 26G1 •••• .1

Dimensions in mm.

Electrical Data		Symbol	17DCT 26G1/G2 •••• .* 216P	211P	209P	208P	207P	Unit
1	Nominal Voltage	V	3	6	9	12	15	Volt
2	No-Load Speed	n_0	7657	7690	7498	8011	8206	rpm
3	No-Load Current	I_0	92.6	46.3	30.1	24.1	19.7	mA
4	Terminal Resistance	R	1.0	3.4	7.8	12.2	18.7	Ω
5	Output Power	$P_{2max.}$	4.1	4.5	4.5	4.5	4.4	W
6	Stall Torque	mNm	10.8 (1.53)	12.57 (1.79)	12.61 (1.79)	13.43 (1.91)	13.3 (1.89)	mNm (oz-in)
7	Efficiency	$h_{max.}$	68	70	70	71	71	%
8	Max Continuous Speed	$n_{e\ max.}$	10000	10000	10000	10000	10000	rpm
9	Max Continuous Torque	$M_{e\ max.}$	5.25 (0.75)	5.68 (0.81)	5.77 (0.82)	5.76 (0.82)	5.65 (0.81)	mNm (oz-in)
10	Max Continuous Current	$I_{e\ max.}$	1.54	0.83	0.55	0.44	0.35	A
11	Back-EMF Constant	k_E	0.38	0.76	1.17	1.46	1.78	mV/rpm
12	Torque Constant	k_M	3.63	7.26	11.16	13.96	17.03	mNm/A
13	Motor Regulation	R/k^2	74.24	64.05	62.25	62.43	64.59	10^3/Nms
14	Friction Torque	T_F	0.3 (0.042)	0.3 (0.042)	0.3 (0.042)	0.3 (0.042)	0.3 (0.042)	mNm (oz-in)
15	Mechanical Time Constant	τ_m	7.81	6.61	6.38	6.32	6.28	ms
16	Rotor Inertia	J	1.05	1.03	1.02	1.01	0.97	g-cm²

General Data				
18	Thermal Resistance (rotor/body)	R_{th1}/R_{th2}	6/25	°C/W
19	Thermal Time Constant (rotor/stator)	t_{W1}/t_{W2}	12/250	S
20	Operating Temperature Range:	motor rotor	-30°C to 85°C (-22°F to 185°F) 100°C (212°F)	°C (°F) °C (°F)
21	Shaft Load Max.: (5 mm. from bearing)	 -radial -axial	With sleeve bearings 1.5 (5.39) 100 (359.6)	 N (oz) N (oz)
22	Shaft Play:	-radial -axial	0.03 (0.0012) 0.15 (0.0059)	mm (inch) mm (inch)
23	Weight	g	27 (0.96)	g (oz)

*Also available with ball bearing

Execution Table

Gearbox	Single Shaft	MR2	M Sense B
R16	1	2	Upon Request
B16	3	4	Upon Request
BA16	3	4	Upon Request

Note:
G1: standard commutation
G2: special commutation for double shaft version

No Load Speed vs. Torque

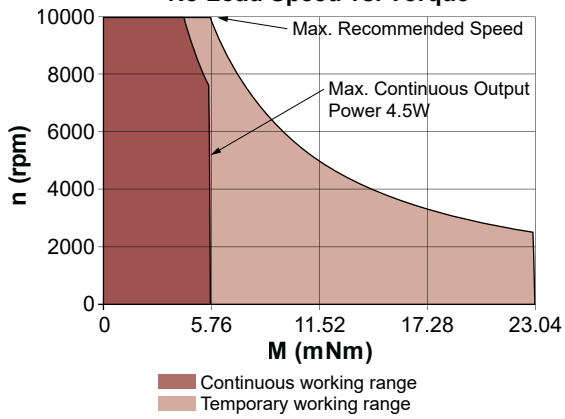

17DCT Athlonix™

Ø 17 mm • Graphite-Copper commutation • 5.88 mNm

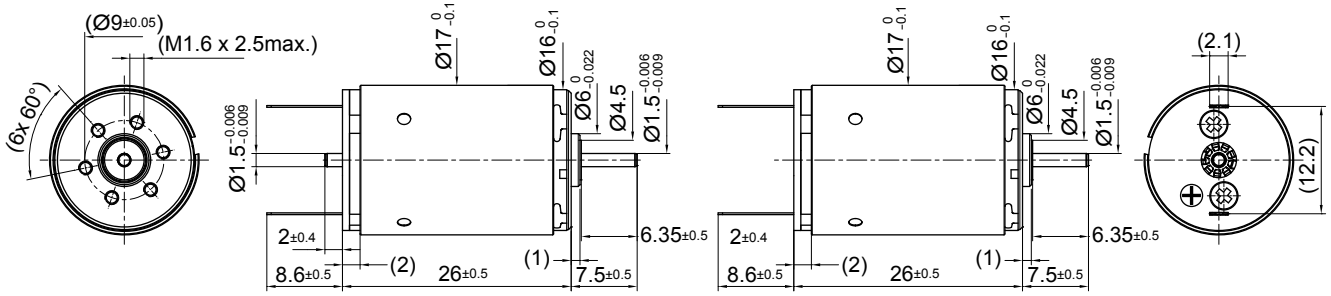

17DCT 26G2 •••• .2 17DCT 26G1 •••• .1

Dimensions in mm.

Electrical Data	Symbol	17DCT 26G1/G2 •••• .* 209E	205P	107P	205E	Unit
1 Nominal Voltage	V	18	24	36	48	Volt
2 No-Load Speed	n_0	7869	7628	9653	7988	rpm
3 No-Load Current	I_0	15.8	11.5	9.6	6.0	mA
4 Terminal Resistance	R	30.8	51.5	76.1	208.2	Ω
5 Output Power	$P_{2max.}$	4.3	4.6	4.5	4.4	W
6 Stall Torque	mNm	12.07 (1.71)	13.33 (1.89)	16.16 (2.29)	12.55 (1.78)	mNm (oz-in)
7 Efficiency	$h_{max.}$	70	71	73	70	%
8 Max Continuous Speed	$n_{e\ max.}$	10000	10000	10000	10000	rpm
9 Max Continuous Torque	$M_{e\ max.}$	5.49 (0.78)	5.88 (0.84)	5.75 (0.82)	5.56 (0.79)	mNm (oz-in)
10 Max Continuous Current	$I_{e\ max.}$	0.27	0.21	0.17	0.11	A
11 Back-EMF Constant	k_E	2.23	3.07	3.65	5.85	mV/rpm
12 Torque Constant	k_M	21.25	29.31	34.89	55.88	mNm/A
13 Motor Regulation	R/k^2	68.23	59.91	62.53	66.65	10^3/Nms
14 Friction Torque	T_F	0.3 (0.042)	0.3 (0.042)	0.3 (0.042)	0.3 (0.042)	mNm (oz-in)
15 Mechanical Time Constant	τ_m	7.08	6.24	6.23	7.04	ms
16 Rotor Inertia	J	1.04	1.04	1.00	1.06	g-cm²

General Data			
18 Thermal Resistance (rotor/body)	R_{th1}/R_{th2}	6/25	°C/W
19 Thermal Time Constant (rotor/stator)	t_{W1}/t_{W2}	12/250	S
20 Operating Temperature Range:	motor rotor	-30°C to 85°C (-22°F to 185°F) 100°C (212°F)	°C (°F) °C (°F)
21 Shaft Load Max.: (5 mm. from bearing)	 -radial -axial	With sleeve bearings 1.5 (5.39) 100 (359.6)	 N (oz) N (oz)
22 Shaft Play:	-radial -axial	0.03 (0.0012) 0.15 (0.0059)	mm (inch) mm (inch)
23 Weight	g	27 (0.96)	g (oz)

*Also available with ball bearing

Execution Table

Gearbox	Single Shaft	MR2	M Sense B
R16	1	2	Upon Request
B16	3	4	Upon Request
BA16	3	4	Upon Request

Note:
G1: standard commutation
G2: special commutation for double shaft version

No Load Speed vs. Torque

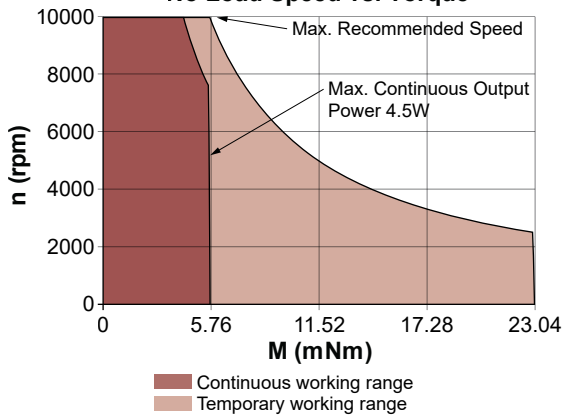

V092018 • © 2018 Portescap. Specifications subject to change without notice.

17N78

Ø 17 mm • Precious metal commutation • 5.7 mNm

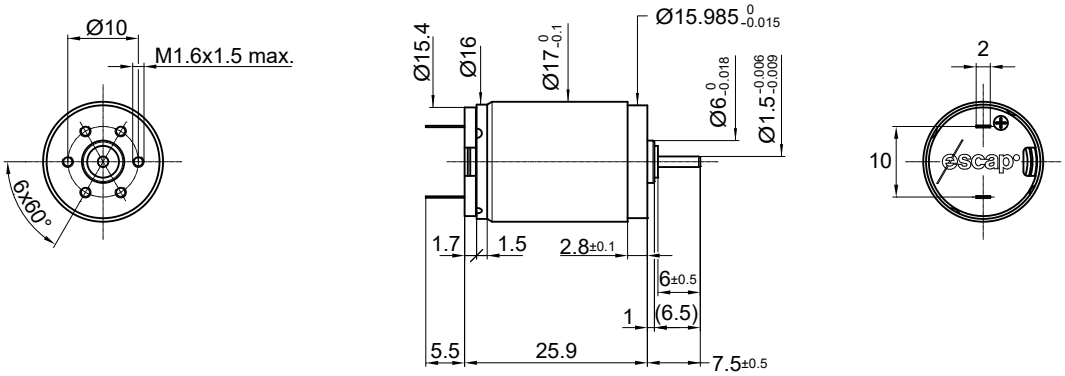

Dimensions in mm.

Electrical Data		Symbol	17N78 •••• .1 216E	210E	208E	207E	Unit
1	Nominal Voltage	V	6	12	18	24	Volt
2	No-Load Speed	n_0	8,480	8,460	8,460	8,900	rpm
3	No-Load Current	I_0	16.0	7.7	4.9	3.5	mA
4	Terminal Resistance	R	3.2	17.3	38.4	65.0	Ω
5	Output Power	$P_{2max.}$	3.6	3.1	3.2	3.1	W
6	Stall Torque	mNm	12.5 (1.78)	9.3 (1.32)	9.4 (1.34)	9.4 (1.34)	mNm (oz-in)
7	Efficiency	$h_{max.}$	82	80	81	81	%
8	Max Continuous Speed	$n_{e\ max.}$	10,000	10,000	10,000	10,000	rpm
9	Max Continuous Torque	$M_{e\ max.}$	5.7 (0.81)	4.8 (0.68)	4.9 (0.7)	4.8 (0.68)	mNm (oz-in)
10	Max Continuous Current	$I_{e\ max.}$	0.86	0.37	0.25	0.19	A
11	Back-EMF Constant	k_E	0.70	1.40	2.10	2.67	mV/rpm
12	Torque Constant	k_M	6.70	13.40	20.10	25.50	mNm/A
13	Motor Regulation	R/k^2	71.3	96.3	95.05	99.96	10^3/Nms
14	Friction Torque	T_F	0.1 (0.02)	0.1 (0.02)	0.1 (0.02)	0.09 (0.02)	mNm (oz-in)
15	Rotor Inductance	L	0.11	0.40	0.90	1.41	mH
16	Mechanical Time Constant	τ_m	7.8	7.7	7.2	7.2	ms
17	Rotor Inertia	J	1.10	0.80	0.76	0.72	g-cm²

General Data				
18	Thermal Resistance (rotor/body)	R_{th1}/R_{th2}	10/30	°C/W
19	Thermal Time Constant (rotor/stator)	t_{W1}/t_{W2}	7/400	S
20	Operating Temperature Range:	motor rotor	-30°C to 85°C (-22°F to 185°F) 100°C (212°F)	°C (°F) °C (°F)
21	Shaft Load Max.: (5 mm. from bearing)	 -radial -axial	With sleeve bearings 1.5 (5.4) 100 (359.6)	 N (oz) N (oz)
22	Shaft Play:	-radial -axial	<0.03 (0.0012) 0.15 (0.0059)	mm (inch) mm (inch)
23	Weight	g	27 (0.96)	g (oz)

Execution Table

Gearbox	Single Shaft	F16	MR2
B16	5	5	Upon Request
BA16	5	5	Upon Request
R16	1	1	Upon Request

No Load Speed vs. Torque

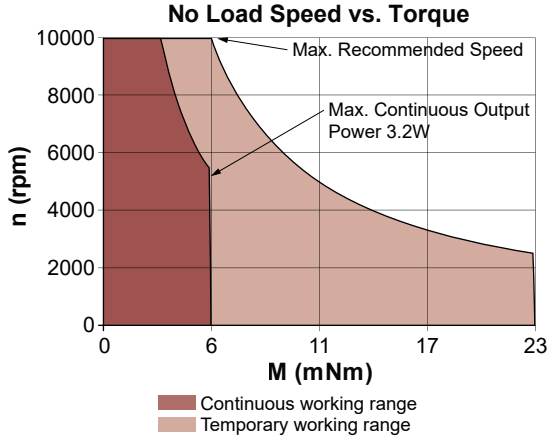

17S78

Ø 17 mm • Precious metal commutation • 2.8 mNm

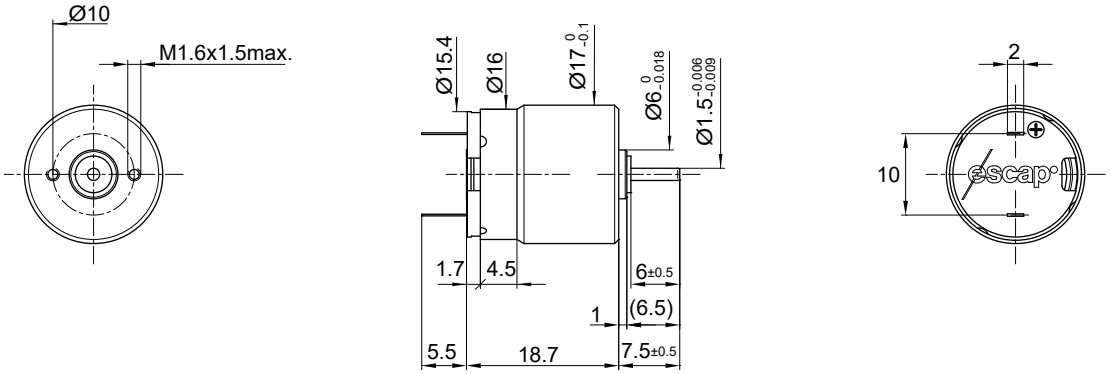

Dimensions in mm.

Electrical Data		Symbol	17S78 •••• .1 208P	210E	209E	Unit
1	Nominal Voltage	V	6	7.5	12	Volt
2	No-Load Speed	n_0	10,280	10,865	12,430	rpm
3	No-Load Current	I_0	25.0	18.0	8.4	mA
4	Terminal Resistance	R	7.5	12.2	18.6	Ω
5	Output Power	$P_{2max.}$	1.7	1.6	1.8	W
6	Stall Torque	mNm	4.3 (0.61)	3.9 (0.56)	5.9 (0.84)	mNm (oz-in)
7	Efficiency	$h_{max.}$	68	69	78	%
8	Max Continuous Speed	$n_{e\ max.}$	10,000	10,000	10,000	rpm
9	Max Continuous Torque	$M_{e\ max.}$	2.6 (0.34)	2.4 (0.34)	2.8 (0.4)	mNm (oz-in)
10	Max Continuous Current	$I_{e\ max.}$	0.50	0.38	0.32	A
11	Back-EMF Constant	k_E	0.57	0.67	0.95	mV/rpm
12	Torque Constant	k_M	5.40	6.40	9.10	mNm/A
13	Motor Regulation	R/k^2	255.0	300.0	225.0	10^3/Nms
14	Friction Torque	T_F	0.12 (0.02)	0.12 (0.02)	0.08 (0.02)	mNm (oz-in)
15	Rotor Inductance	L	0.15	0.23	0.35	mH
16	Mechanical Time Constant	τ_m	12.8	15.0	11.3	ms
17	Rotor Inertia	J	0.50	0.50	0.50	g-cm²
General Data						
18	Thermal Resistance (rotor/body)	R_{th1}/R_{th2}	13/38			°C/W
19	Thermal Time Constant (rotor/stator)	t_{W1}/t_{W2}	7/400			S
20	Operating Temperature Range:	motor rotor	-30°C to 85°C (-22°F to 185°F) 100°C (212°F)			°C (°F) °C (°F)
21	Shaft Load Max.: (5 mm. from bearing)	 -radial -axial	With sleeve bearings 1.5 (5.4) 100 (359.6)			 N (oz) N (oz)
22	Shaft Play:	-radial -axial	<0.03 (0.0012) 0.15 (0.0059)			mm (inch) mm (inch)
23	Weight	g	19 (0.68)			g (oz)

Execution Table

Gearbox	Single Shaft	F16	MR2
B16	5	5	Upon Request
BA16	5	5	Upon Request
R16	1	1	96

No Load Speed vs. Torque

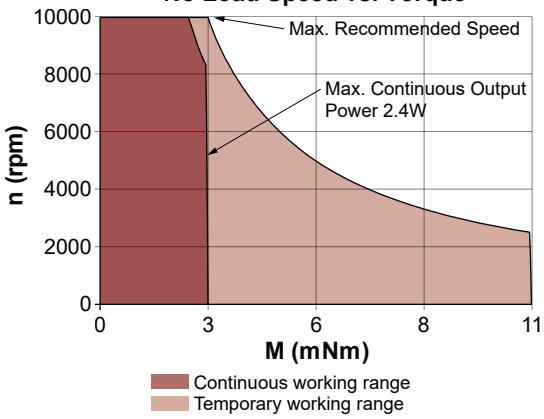

V092018 • © 2018 Portescap. Specifications subject to change without notice.

22DCP Athlonix™

Ø 22 mm • Precious metal commutation • 6.5 mNm

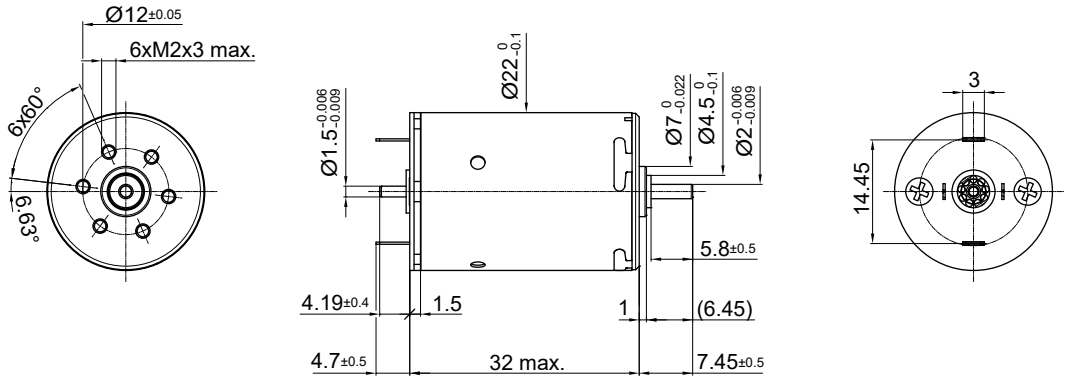

Dimensions in mm.

Electrical Data		Symbol	22DCP 32P2 •••• .2						Unit
			221P	216P	213P	211P	210P	209P	
1	Nominal Voltage	V	3	6	9	12	15	18	Volt
2	No-Load Speed	n_0	8321	9739	10022	9741	9741	9348	rpm
3	No-Load Current	I_0	58.9	34.4	23.6	17.2	13.8	11.0	mA
4	Terminal Resistance	R	0.7	2.0	4.1	7.8	12.1	18.6	Ω
5	Output Power	$P_{2max.}$	2.9	4.1	4.4	4.2	4.2	4.0	W
6	Stall Torque	mNm	13.65 (1.94)	17.47 (2.48)	18.34 (2.6)	17.81 (2.53)	17.83 (2.53)	17.37 (2.46)	mNm (oz-in)
7	Efficiency	$h_{max.}$	77	80	80	80	80	80	%
8	Max Continuous Speed	$n_{e\ max.}$	10000	10000	10000	10000	10000	10000	rpm
9	Max Continuous Torque	$M_{e\ max.}$	6.09 (0.87)	6.38 (0.91)	6.45 (0.92)	6.44 (0.92)	6.45 (0.92)	6.5 (0.93)	mNm (oz-in)
10	Max Continuous Current	$I_{e\ max.}$	1.85	1.13	0.78	0.57	0.46	0.37	A
11	Back-EMF Constant	k_E	0.36	0.61	0.89	1.22	1.52	1.90	mV/rpm
12	Torque Constant	k_M	3.39	5.82	8.48	11.63	14.54	18.18	mNm/A
13	Motor Regulation	R/k^2	63.83	58.37	57.22	57.28	57.22	56.34	10^3/Nms
14	Friction Torque	T_F	0.2 (0.03)	0.2 (0.03)	0.2 (0.03)	0.2 (0.03)	0.2 (0.03)	0.2 (0.03)	mNm (oz-in)
15	Mechanical Time Constant	τ_m	30.63	27.87	27.12	26.81	26.68	26.60	ms
16	Rotor Inertia	J	4.80	4.78	4.74	4.68	4.66	4.72	g-cm²

General Data				
18	Thermal Resistance (rotor/body)	R_{th1}/R_{th2}	6/22	°C/W
19	Thermal Time Constant (rotor/stator)	t_{W1}/t_{W2}	9/550	S
20	Operating Temperature Range:	motor rotor	-30°C to 85°C (-22°F to 185°F) 100°C (212°F)	°C (°F) °C (°F)
21	Shaft Load Max.: (5 mm. from bearing)	 -radial -axial	With sleeve bearings 1.5 (5.39) 100 (359.6)	 N (oz) N (oz)
22	Shaft Play:	-radial -axial	0.03 (0.0012) 0.15 (0.0059)	mm (inch) mm (inch)
23	Weight	g	58 (2.05)	g (oz)

*Also available with ball bearing

Execution Table

Gearbox	Single Shaft	MR2	E9
R22	4	5	6
K24	7	8	9
K27	1	2	3
R22HT	11	Upon Request	Upon Request

Note:
P1: standard commutation
P2: special commutation for double shaft version

No Load Speed vs. Torque

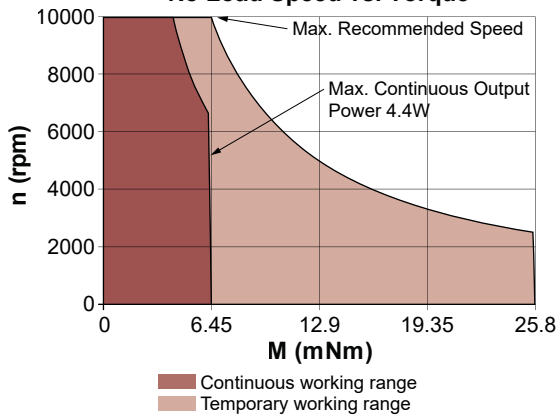

22DCP Athlonix™

Ø 22 mm • Precious metal commutation • 6.5 mNm

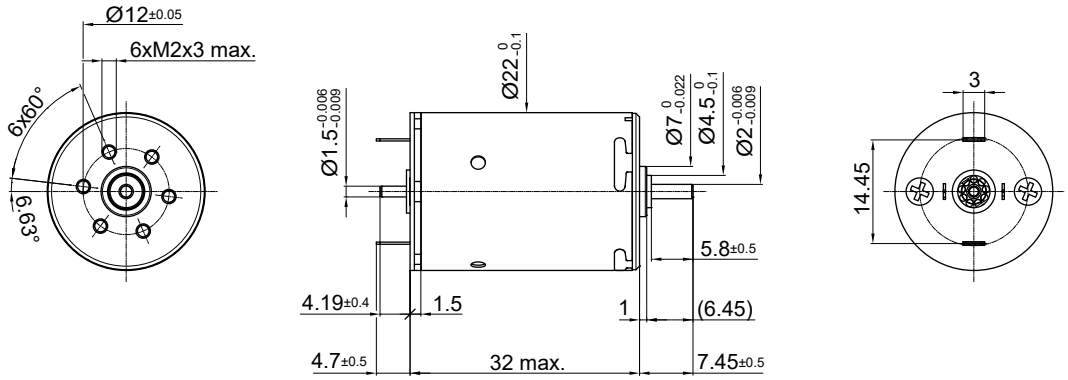

Dimensions in mm.

Electrical Data		Symbol	22DCP 32P2 •••• .2					Unit
			212E	211E	210E	209E	208E	
1	Nominal Voltage	V	21	24	30	36	48	Volt
2	No-Load Speed	n_0	10,357	10,465	10,806	10,281	11,049	rpm
3	No-Load Current	I_0	10.5	9.2	7.6	6.1	4.9	mA
4	Terminal Resistance	R	23.4	30.4	46.1	71.7	112.6	Ω
5	Output Power	$P_{2max.}$	4.2	4.3	4.4	4.1	4.5	W
6	Stall Torque	mNm	16.95 (2.41)	16.89 (2.4)	16.85 (2.39)	16.39 (2.33)	17.28 (2.45)	mNm (oz-in)
7	Efficiency	$h_{max.}$	80	80	80	79	80	%
8	Max Continuous Speed	$n_{e\ max.}$	10,000	10,000	10,000	10,000	10,000	rpm
9	Max Continuous Torque	$M_{e\ max.}$	6.08 (0.86)	6.04 (0.86)	5.93 (0.84)	6 (0.85)	5.94 (0.85)	mNm (oz-in)
10	Max Continuous Current	$I_{e\ max.}$	0.33	0.29	0.23	0.19	0.15	A
11	Back-EMF Constant	k_E	2.00	2.27	2.74	3.46	4.29	mV/rpm
12	Torque Constant	k_M	19.14	21.64	26.20	33.03	41.01	mNm/A
13	Motor Regulation	R/k^2	64.0	64.9	67.2	65.70	66.95	10^3/Nms
14	Friction Torque	T_F	0.2 (0.03)	0.2 (0.03)	0.2 (0.03)	0.2 (0.03)	0.2 (0.03)	mNm (oz-in)
15	Mechanical Time Constant	τ_m	30.1	30.0	30.0	30.0	30.0	ms
16	Rotor Inertia	J	4.70	4.63	4.47	4.56	4.48	g-cm²

General Data				
18	Thermal Resistance (rotor/body)	R_{th1}/R_{th2}	6/22	°C/W
19	Thermal Time Constant (rotor/stator)	t_{W1}/t_{W2}	9/550	S
20	Operating Temperature Range:	motor rotor	-30°C to 85°C (-22°F to 185°F) 100°C (212°F)	°C (°F) °C (°F)
21	Shaft Load Max.: (5 mm. from bearing)	 -radial -axial	With sleeve bearings 1.5 (5.39) 100 (359.6)	 N (oz) N (oz)
22	Shaft Play:	-radial -axial	0.03 (0.0012) 0.15 (0.0059)	mm (inch) mm (inch)
23	Weight	g	58 (2.05)	g (oz)

*Also available with ball bearing

Execution Table

Gearbox	Single Shaft	MR2	E9
R22	4	5	6
K24	7	8	9
K27	1	2	3
R22HT	11	Upon Request	Upon Request

Note:
P1: standard commutation
P2: special commutation for double shaft version

No Load Speed vs. Torque

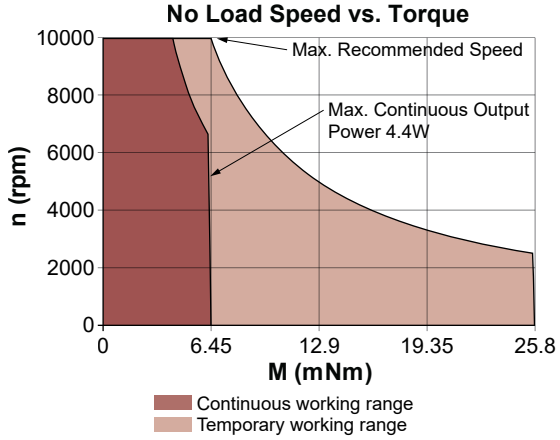

V092018 • © 2018 Portescap. Specifications subject to change without notice.

22DCP Athlonix™

Ø 22 mm • Graphite-Copper commutation • 6.21 mNm

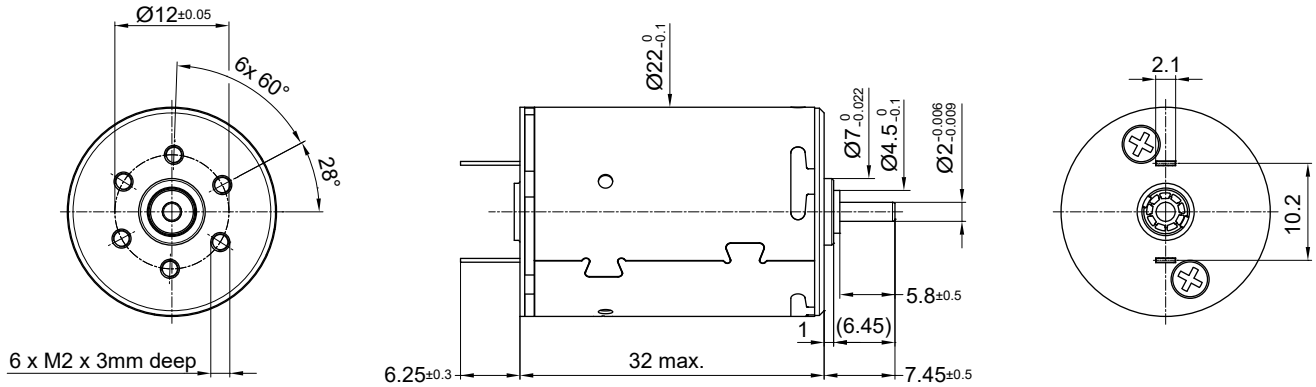

Dimensions in mm.

Electrical Data		Symbol	22DCP 32G1 •••• .1						Unit
			221P	216P	213P	211P	210P	209P	
1	Nominal Voltage	V	3	6	9	12	15	18	Volt
2	No-Load Speed	n_0	8094	9574	9874	9598	9600	9211	rpm
3	No-Load Current	I_0	132.6	77.4	53.0	38.7	30.9	24.8	mA
4	Terminal Resistance	R	0.9	2.2	4.3	8.0	12.3	18.8	Ω
5	Output Power	$P_{2max.}$	2.2	3.7	4.1	3.9	4.0	3.8	W
6	Stall Torque	mNm	10.44 (1.48)	15.6 (2.21)	17.23 (2.45)	17.1 (2.43)	17.29 (2.45)	16.94 (2.4)	mNm (oz-in)
7	Efficiency	$h_{max.}$	63	69	71	71	71	70	%
8	Max Continuous Speed	$n_{e\ max.}$	10000	10000	10000	10000	10000	10000	rpm
9	Max Continuous Torque	$M_{e\ max.}$	5.13 (0.73)	5.82 (0.83)	6.04 (0.86)	6.11 (0.87)	6.14 (0.87)	6.21 (0.88)	mNm (oz-in)
10	Max Continuous Current	$I_{e\ max.}$	1.64	1.08	0.77	0.56	0.45	0.37	A
11	Back-EMF Constant	k_E	0.36	0.61	0.89	1.22	1.52	1.90	mV/rpm
12	Torque Constant	k_M	3.39	5.82	8.48	11.63	14.54	18.18	mNm/A
13	Motor Regulation	R/k^2	81.20	64.28	60.00	58.76	58.16	56.95	10^3/Nms
14	Friction Torque	T_F	0.45 (0.07)	0.45 (0.07)	0.45 (0.07)	0.45 (0.07)	0.45 (0.07)	0.45 (0.07)	mNm (oz-in)
15	Mechanical Time Constant	τ_m	38.97	30.70	28.44	27.50	27.12	26.89	ms
16	Rotor Inertia	J	4.80	4.78	4.74	4.68	4.66	4.72	g-cm²

General Data				
18	Thermal Resistance (rotor/body)	R_{th1}/R_{th2}	6/22	°C/W
19	Thermal Time Constant (rotor/stator)	t_{W1}/t_{W2}	9/550	S
20	Operating Temperature Range:	motor rotor	-30°C to 85°C (-22°F to 185°F) 100°C (212°F)	°C (°F) °C (°F)
21	Shaft Load Max.: (5 mm. from bearing)	 -radial -axial	With sleeve bearings 1.5 (5.39) 100 (359.6)	 N (oz) N (oz)
22	Shaft Play:	-radial -axial	0.03 (0.0012) 0.15 (0.0059)	mm (inch) mm (inch)
23	Weight	g	58 (2.05)	g (oz)

*Also available with ball bearing

Execution Table

Gearbox	Single Shaft	MR2	E9
R22	4	5	6
K24	7	8	9
K27	1	2	3
R22HT	11	Upon Request	Upon Request

Note:
G1: standard commutation
G2: special commutation for double shaft version

No Load Speed vs. Torque

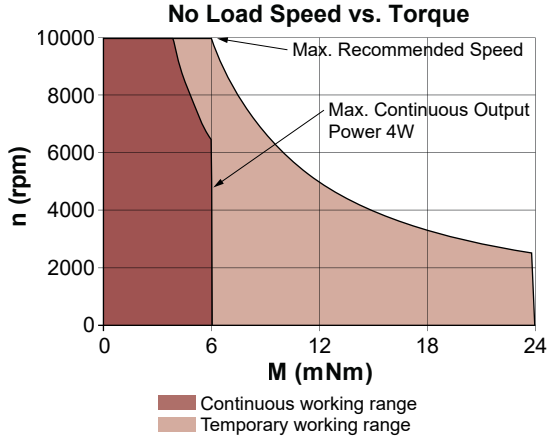

22DCP Athlonix™

Ø 22 mm • Graphite-Copper commutation • 6.21 mNm

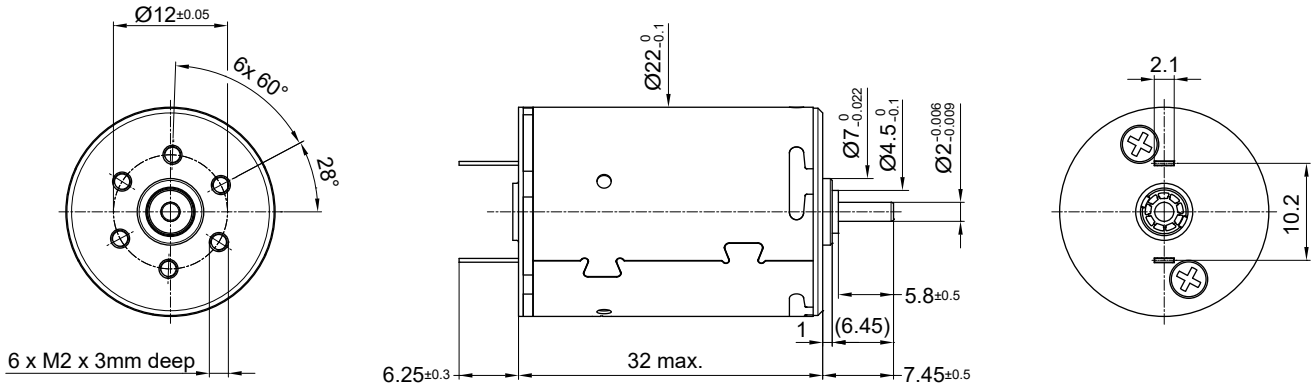

Dimensions in mm.

Electrical Data		Symbol	22DCP 32G1 •••• .1					Unit
			212E	211E	210E	209E	208E	
1	Nominal Voltage	V	21	24	30	36	48	Volt
2	No-Load Speed	n_0	10,201	10,308	10,645	10,123	10,889	rpm
3	No-Load Current	I_0	23.5	20.8	17.2	13.6	11.0	mA
4	Terminal Resistance	R	23.6	30.6	46.3	71.9	112.8	Ω
5	Output Power	$P_{2max.}$	4.0	4.1	4.2	3.9	4.3	W
6	Stall Torque	mNm	16.56 (2.35)	16.53 (2.35)	16.53 (2.35)	16.09 (2.28)	17 (2.41)	mNm (oz-in)
7	Efficiency	$h_{max.}$	70	70	70	70	70	%
8	Max Continuous Speed	$n_{e\ max.}$	10,000	10,000	10,000	10,000	10,000	rpm
9	Max Continuous Torque	$M_{e\ max.}$	5.81 (0.83)	5.77 (0.82)	5.67 (0.81)	5.74 (0.82)	5.69 (0.81)	mNm (oz-in)
10	Max Continuous Current	$I_{e\ max.}$	0.33	0.29	0.23	0.19	0.15	A
11	Back-EMF Constant	k_E	2.00	2.27	2.74	3.46	4.29	mV/rpm
12	Torque Constant	k_M	19.14	21.64	26.20	33.03	41.01	mNm/A
13	Motor Regulation	R/k^2	64.5	65.3	67.4	65.89	67.07	10^3/Nms
14	Friction Torque	T_F	0.45 (0.07)	0.45 (0.07)	0.45 (0.07)	0.45 (0.07)	0.45 (0.07)	mNm (oz-in)
15	Mechanical Time Constant	τ_m	30.3	30.2	30.1	30.1	30.0	ms
16	Rotor Inertia	J	4.70	4.63	4.47	4.56	4.48	g-cm²

General Data				
18	Thermal Resistance (rotor/body)	R_{th1}/R_{th2}	6.22	°C/W
19	Thermal Time Constant (rotor/stator)	t_{W1}/t_{W2}	9/550	S
20	Operating Temperature Range:	motor rotor	-30°C to 85°C (-22°F to 185°F) 100°C (212°F)	°C (°F) °C (°F)
21	Shaft Load Max.: (5 mm. from bearing)	 -radial -axial	With sleeve bearings 1.5 (5.39) 100 (359.6)	 N (oz) N (oz)
22	Shaft Play:	-radial -axial	0.03 (0.0012) 0.15 (0.0059)	mm (inch) mm (inch)
23	Weight	g	58 (2.05)	g (oz)

*Also available with ball bearing

Execution Table

Gearbox	Single Shaft	MR2	E9
R22	4	5	6
K24	7	8	9
K27	1	2	3
R22HT	11	Upon Request	Upon Request

Note:
G1: standard commutation
G2: special commutation for double shaft version

No Load Speed vs. Torque

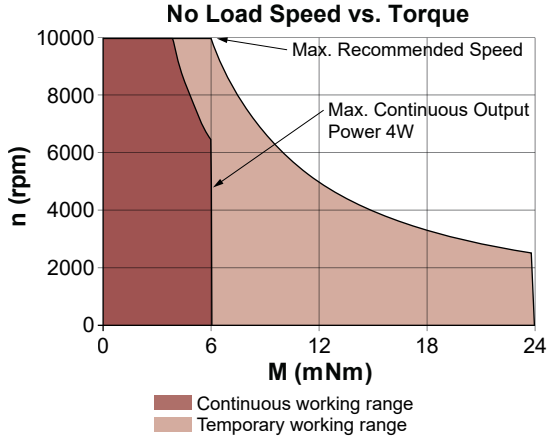

V092018 • © 2018 Portescap. Specifications subject to change without notice.

22DCT Athlonix™

Ø 22 mm • Precious metal commutation • 13.28 mNm

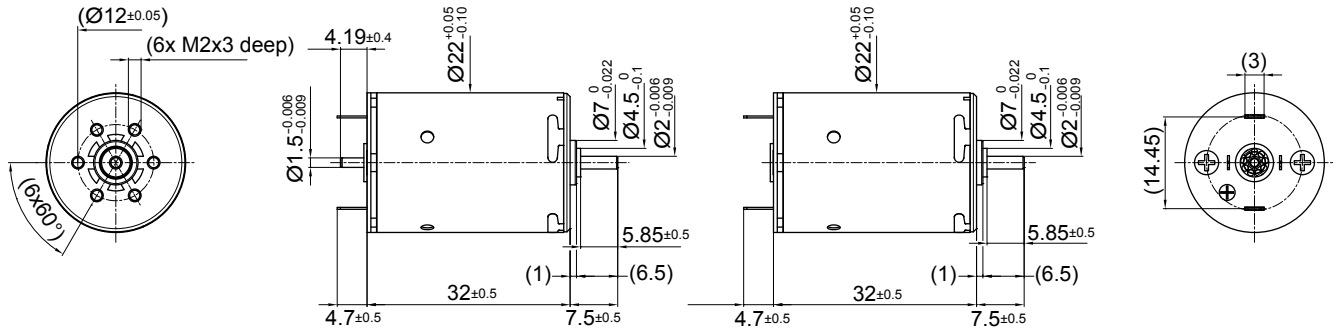

22DCT 32P2 •••• .2

22DCT 32P1 •••• .14

Dimensions in mm.

Electrical Data		Symbol	22DCT 32P1/P2 •••• .*						Unit
			135P	225P	228E	226E	224E	220E	
1	Nominal Voltage	V	3	6	6	9	12	12	Volt
2	No-Load Speed	n_0	5525	8525	5887	7071	8131	6040	rpm
3	No-Load Current	I_0	42.7	32.8	22.7	18.2	15.7	11.6	mA
4	Terminal Resistance	R	0.4	0.5	1.1	1.6	2.1	4.0	Ω
5	Output Power	$P_{2max.}$	4.7	9.6	5.9	7.9	9.4	6.3	W
6	Stall Torque	mNm	37.59 (5.33)	77.71 (11.01)	51.68 (7.32)	68.82 (9.75)	79.56 (11.27)	56.48 (8)	mNm (oz-in)
7	Efficiency	$h_{max.}$	85	90	87	89	90	88	%
8	Max Continuous Speed	$n_{e\ max.}$	10000	10000	10000	10000	10000	10000	rpm
9	Max Continuous Torque	$M_{e\ max.}$	11.04 (1.57)	12.81 (1.82)	12.57 (1.79)	13.25 (1.88)	13.28 (1.89)	12.98 (1.84)	mNm (oz-in)
10	Max Continuous Current	$I_{e\ max.}$	2.19	1.95	1.32	1.11	0.96	0.70	A
11	Back-EMF Constant	k_E	0.54	0.70	1.01	1.27	1.47	1.98	mV/rpm
12	Torque Constant	k_M	5.16	6.70	9.69	12.12	14.05	18.90	mNm/A
13	Motor Regulation	R/k^2	15.00	11.49	11.93	10.76	10.70	11.20	10^3/Nms
14	Friction Torque	T_F	0.22 (0.04)	0.22 (0.04)	0.22 (0.04)	0.22 (0.04)	0.22 (0.04)	0.22 (0.04)	mNm (oz-in)
15	Mechanical Time Constant	τ_m	7.54	7.25	7.27	7.07	6.95	6.79	ms
16	Rotor Inertia	J	4.90	6.32	6.09	6.57	6.49	6.06	g-cm²

General Data				
18	Thermal Resistance (rotor/body)	R_{th1}/R_{th2}	6/22	°C/W
19	Thermal Time Constant (rotor/stator)	t_{W1}/t_{W2}	9/550	S
20	Operating Temperature Range:	motor rotor	-30°C to 85°C (-22°F to 185°F) 100°C (212°F)	°C (°F) °C (°F)
21	Shaft Load Max.: (5 mm. from bearing)	 -radial -axial	With sleeve bearings 3 (10.79) 100 (359.6)	 N (oz) N (oz)
22	Shaft Play:	-radial -axial	0.03 (0.0012) 0.15 (0.0059)	mm (inch) mm (inch)
23	Weight	g	65 (2.3)	g (oz)

*Also available with ball bearing

Execution Table

Gearbox	Single Shaft	MR2	E9
R22	4	5	6
K24	7	8	9
K27	1	2	3
R22HT	20	21	22

Note:
P1: standard commutation
P2: special commutation for double shaft version

No Load Speed vs. Torque

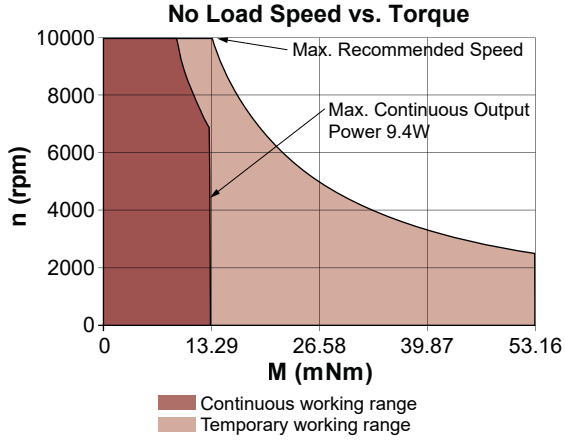

22DCT Athlonix™

Ø 22 mm • Precious metal commutation • 13.28 mNm

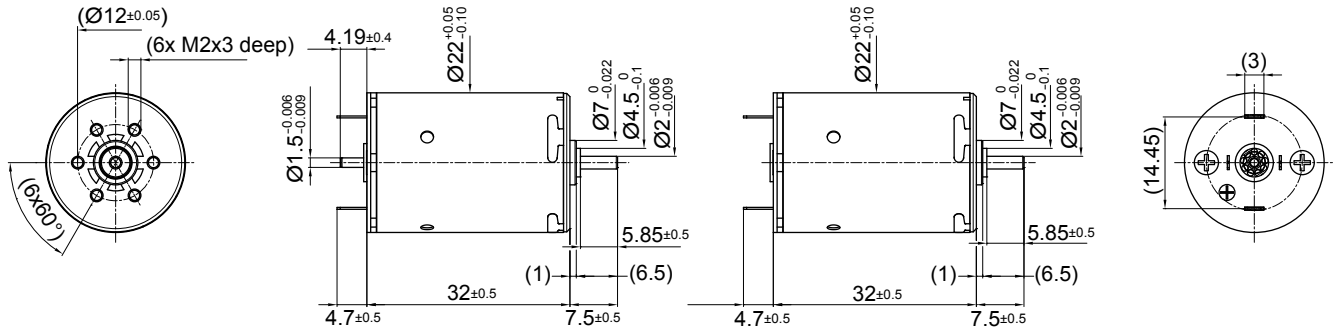

22DCT 32P2 •••• .2 **22DCT 32P1 •••• .14**

Dimensions in mm.

Electrical Data		Symbol	22DCT 32P1/P2 •••• .*					Unit
			216E	215E	212E	211E	209E	
1	Nominal Voltage	V	18	24	24	36	48	Volt
2	No-Load Speed	n_0	6666	8569	5600	7437	6493	rpm
3	No-Load Current	I_0	8.6	8.3	5.4	4.8	3.1	mA
4	Terminal Resistance	R	8.4	9.9	23.4	30.4	71.7	Ω
5	Output Power	$P_{2max.}$	6.6	8.6	4.9	7.0	5.9	W
6	Stall Torque	mNm	54.94 (7.79)	64.54 (9.15)	41.47 (5.88)	54.31 (7.7)	46.82 (6.64)	mNm (oz-in)
7	Efficiency	$h_{max.}$	88	89	86	88	87	%
8	Max Continuous Speed	$n_{e\ max.}$	10000	10000	10000	10000	10000	rpm
9	Max Continuous Torque	$M_{e\ max.}$	12.17 (1.73)	11.63 (1.65)	11.53 (1.64)	11.44 (1.63)	11.37 (1.62)	mNm (oz-in)
10	Max Continuous Current	$I_{e\ max.}$	0.48	0.44	0.29	0.25	0.17	A
11	Back-EMF Constant	k_E	2.69	2.79	4.26	4.82	7.36	mV/rpm
12	Torque Constant	k_M	25.68	26.65	40.71	46.04	70.27	mNm/A
13	Motor Regulation	R/k^2	12.70	13.90	14.14	14.34	14.52	10^3/Nms
14	Friction Torque	T_F	0.22 (0.04)	0.22 (0.04)	0.22 (0.04)	0.22 (0.04)	0.22 (0.04)	mNm (oz-in)
15	Mechanical Time Constant	τ_m	6.70	6.69	6.65	6.64	6.63	ms
16	Rotor Inertia	J	5.27	4.81	4.70	4.63	4.56	g-cm²

General Data				
18	Thermal Resistance (rotor/body)	R_{th1}/R_{th2}	6/22	°C/W
19	Thermal Time Constant (rotor/stator)	t_{W1}/t_{W2}	9/550	S
20	Operating Temperature Range:	motor rotor	-30°C to 85°C (-22°F to 185°F) 100°C (212°F)	°C (°F) °C (°F)
21	Shaft Load Max.: (5 mm. from bearing)	 -radial -axial	With sleeve bearings 3 (10.79) 100 (359.6)	 N (oz) N (oz)
22	Shaft Play:	-radial -axial	0.03 (0.0012) 0.15 (0.0059)	mm (inch) mm (inch)
23	Weight	g	65 (2.3)	g (oz)

*Also available with ball bearing

Execution Table

Gearbox	Single Shaft	MR2	E9
R22	4	5	6
K24	7	8	9
K27	1	2	3
R22HT	20	21	22

Note:
P1: standard commutation
P2: special commutation for double shaft version

No Load Speed vs. Torque

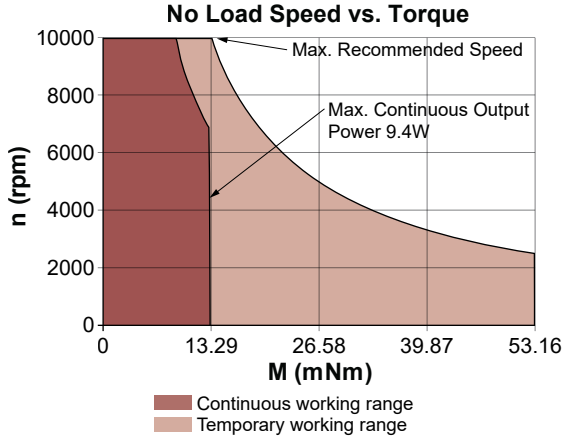

V092018 • © 2018 Portescap. Specifications subject to change without notice.

22DCT Athlonix™

Ø 22 mm • Graphite-Copper commutation • 12.74 mNm

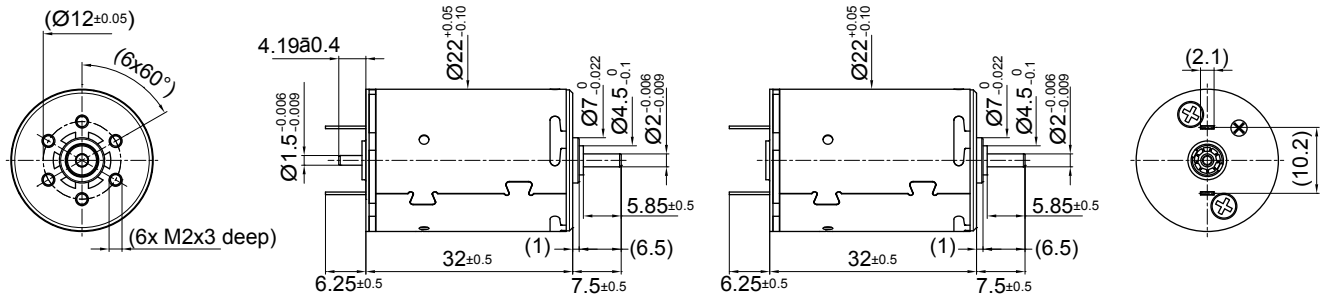

22DCT 32G2 •••• .2 **22DCT 32G1 •••• .1**

Dimensions in mm.

Electrical Data		Symbol	22DCT 32G1/G2 •••• .*						Unit
			135P	225P	228E	226E	224E	220E	
1	Nominal Voltage	V	3	6	6	9	12	12	Volt
2	No-Load Speed	n_0	5475	8490	5856	7045	8106	6014	rpm
3	No-Load Current	I_0	87.3	67.1	46.4	37.1	32.0	23.8	mA
4	Terminal Resistance	R	0.5	0.6	1.2	1.7	2.2	4.1	Ω
5	Output Power	$P_{2max.}$	3.9	8.4	5.4	7.5	9.0	6.1	W
6	Stall Torque	mNm	29.93 (4.24)	64.83 (9.19)	47.2 (6.69)	64.48 (9.14)	75.72 (10.73)	54.86 (7.77)	mNm (oz-in)
7	Efficiency	$h_{max.}$	77	84	82	84	85	83	%
8	Max Continuous Speed	$n_{e\ max.}$	10000	10000	10000	10000	10000	10000	rpm
9	Max Continuous Torque	$M_{e\ max.}$	9.65 (1.37)	11.48 (1.63)	11.8 (1.68)	12.61 (1.79)	12.74 (1.81)	12.59 (1.79)	mNm (oz-in)
10	Max Continuous Current	$I_{e\ max.}$	1.96	1.78	1.26	1.08	0.94	0.69	A
11	Back-EMF Constant	k_E	0.54	0.70	1.01	1.27	1.47	1.98	mV/rpm
12	Torque Constant	k_M	5.16	6.70	9.69	12.12	14.05	18.90	mNm/A
13	Motor Regulation	R/k^2	19.00	13.71	12.99	11.44	11.21	11.48	10^3/Nms
14	Friction Torque	T_F	0.45 (0.07)	0.45 (0.07)	0.45 (0.07)	0.45 (0.07)	0.45 (0.07)	0.45 (0.07)	mNm (oz-in)
15	Mechanical Time Constant	τ_m	9.38	8.66	7.92	7.51	7.28	6.96	ms
16	Rotor Inertia	J	4.90	6.32	6.09	6.57	6.49	6.06	g-cm²

General Data				
18	Thermal Resistance (rotor/body)	R_{th1}/R_{th2}	6/22	°C/W
19	Thermal Time Constant (rotor/stator)	t_{W1}/t_{W2}	9/550	S
20	Operating Temperature Range:	motor rotor	-30°C to 85°C (-22°F to 185°F) 100°C (212°F)	°C (°F) °C (°F)
21	Shaft Load Max.: (5 mm. from bearing)	 -radial -axial	With sleeve bearings 3 (10.79) 100 (359.6)	 N (oz) N (oz)
22	Shaft Play:	-radial -axial	0.03 (0.0012) 0.15 (0.0059)	mm (inch) mm (inch)
23	Weight	g	65 (2.3)	g (oz)

*Also available with ball bearing

Execution Table

Gearbox	Single Shaft	MR2	E9
R22	4	5	6
K24	7	8	9
K27	1	2	3
R22HT	20	21	22

Note:
G1: standard commutation
G2: special commutation for double shaft version

No Load Speed vs. Torque

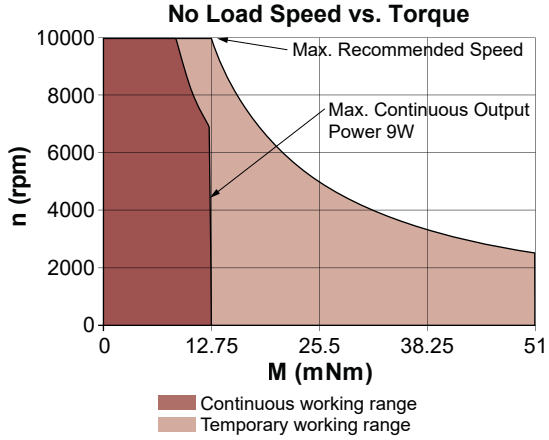

22DCT Athlonix™

Ø 22 mm • Graphite-Copper commutation • 12.74 mNm

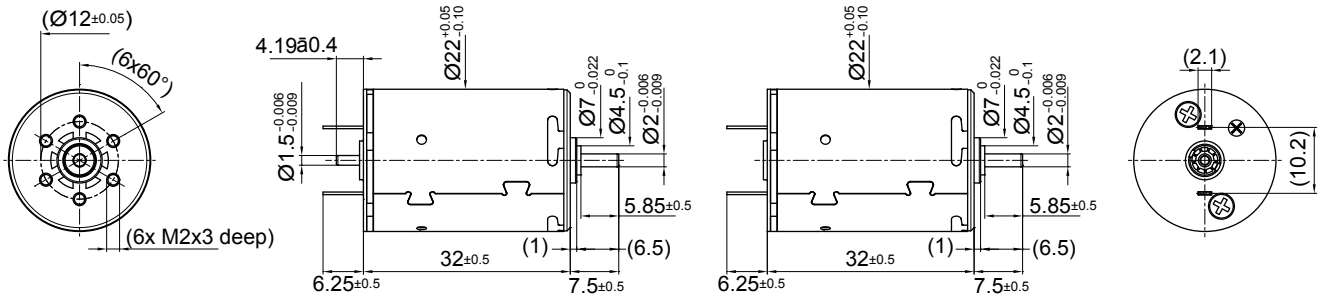

22DCT 32G2 •••• .2 **22DCT 32G1 •••• .1**

Dimensions in mm.

Electrical Data		Symbol	22DCT 32G1/G2 •••• .*					Unit
			216E	215E	212E	211E	209E	
1	Nominal Voltage	V	18	24	24	36	48	Volt
2	No-Load Speed	n_0	6637	8538	5569	7405	6461	rpm
3	No-Load Current	I_0	17.5	16.9	11.1	9.8	6.4	mA
4	Terminal Resistance	R	8.5	10.0	23.5	30.5	71.8	Ω
5	Output Power	$P_{2max.}$	6.4	8.3	4.8	6.9	5.7	W
6	Stall Torque	mNm	54.06 (7.66)	63.66 (9.02)	41.06 (5.82)	53.9 (7.64)	46.52 (6.59)	mNm (oz-in)
7	Efficiency	$h_{max.}$	83	84	80	83	81	%
8	Max Continuous Speed	$n_{e\ max.}$	10000	10000	10000	10000	10000	rpm
9	Max Continuous Torque	$M_{e\ max.}$	11.87 (1.69)	11.34 (1.61)	11.27 (1.6)	11.19 (1.59)	11.13 (1.58)	mNm (oz-in)
10	Max Continuous Current	$I_{e\ max.}$	0.48	0.44	0.29	0.25	0.16	A
11	Back-EMF Constant	k_E	2.69	2.79	4.26	4.82	7.36	mV/rpm
12	Torque Constant	k_M	25.68	26.65	40.71	46.04	70.27	mNm/A
13	Motor Regulation	R/k^2	12.86	14.04	14.20	14.39	14.54	10^3/Nms
14	Friction Torque	T_F	0.45 (0.07)	0.45 (0.07)	0.45 (0.07)	0.45 (0.07)	0.45 (0.07)	mNm (oz-in)
15	Mechanical Time Constant	τ_m	6.78	6.75	6.68	6.66	6.64	ms
16	Rotor Inertia	J	5.27	4.81	4.70	4.63	4.56	g-cm²

General Data				
18	Thermal Resistance (rotor/body)	R_{th1}/R_{th2}	6/22	°C/W
19	Thermal Time Constant (rotor/stator)	t_{W1}/t_{W2}	9/550	S
20	Operating Temperature Range:	motor rotor	-30°C to 85°C (-22°F to 185°F) 100°C (212°F)	°C (°F) °C (°F)
21	Shaft Load Max.: (5 mm. from bearing)	 -radial -axial	With sleeve bearings 3 (10.79) 100 (359.6)	 N (oz) N (oz)
22	Shaft Play:	-radial -axial	0.03 (0.0012) 0.15 (0.0059)	mm (inch) mm (inch)
23	Weight	g	65 (2.3)	g (oz)

*Also available with ball bearing

Execution Table

Gearbox	Single Shaft	MR2	E9
R22	4	5	6
K24	7	8	9
K27	1	2	3
R22HT	20	21	22

Note:
G1: standard commutation
G2: special commutation for double shaft version

No Load Speed vs. Torque

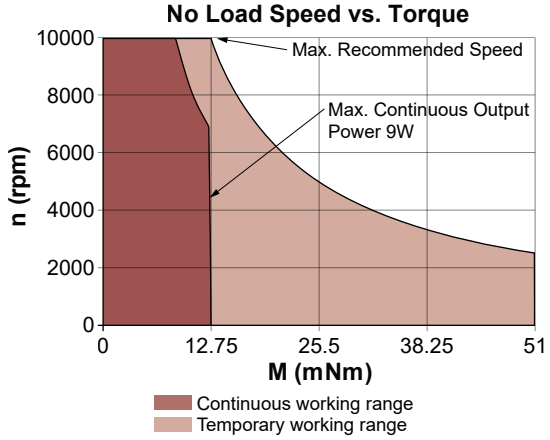

V092018 • © 2018 Portescap. Specifications subject to change without notice.

22N78 Athlonix™

Ø 22 mm • Precious metal commutation • 15.7 mNm

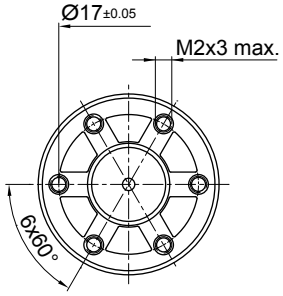

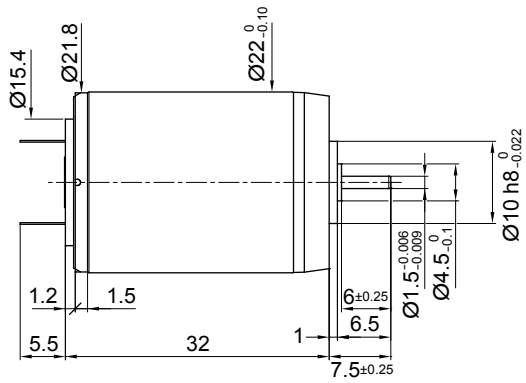

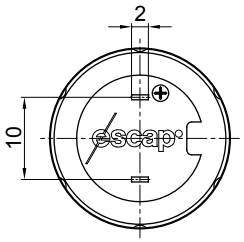

Dimensions in mm.

Electrical Data	Symbol	22N78 •••• .1001 319P	313P	311P	216E	215E	208E	Unit
1 Nominal Voltage	V	6	9	12	18	24	48	Volt
2 No-Load Speed	n_0	8,660	6,860	7,280	8,250	9,075	6,350	rpm
3 No-Load Current	I_0	28.0	20.0	11.0	6.0	5.0	1.5	mA
4 Terminal Resistance	R	0.6	2.5	3.9	7.7	11.0	107.0	Ω
5 Output Power	$P_{2max.}$	13.0	12.0	12.0	11.3	11.5	10.0	W
6 Stall Torque	mNm	66 (9.35)	45 (6.38)	48 (6.8)	49 (6.94)	55 (7.79)	32 (4.54)	mNm (oz-in)
7 Efficiency	$h_{max.}$	90	90	88	90	91	91	%
8 Max Continuous Speed	$n_{e\ max.}$	10,000	10,000	10,000	10,000	10,000	10,000	rpm
9 Max Continuous Torque	$M_{e\ max.}$	15.7 (2.06)	14.5 (2.06)	14.8 (2.1)	13.8 (1.96)	14.5 (2.06)	12.9 (1.83)	mNm (oz-in)
10 Max Continuous Current	$I_{e\ max.}$	2.40	1.18	0.95	0.67	0.58	0.18	A
11 Back-EMF Constant	k_E	0.69	1.31	1.64	2.18	2.64	7.54	mV/rpm
12 Torque Constant	k_M	6.60	12.50	15.70	20.80	25.20	72.00	mNm/A
13 Motor Regulation	R/k^2	13.8	16.0	15.8	17.80	17.32	20.64	10^3/Nms
14 Friction Torque	T_F	0.07 (0.01)	0.25 (0.04)	0.11 (0.02)	0.12 (0.02)	0.12 (0.02)	0.07 (0.01)	mNm (oz-in)
15 Rotor Inductance	L	0.04	0.16	0.25	0.50	0.60	7.00	mH
16 Mechanical Time Constant	τ_m	6.7	7.0	6.6	8.4	7.8	6.9	ms
17 Rotor Inertia	J	4.90	4.39	4.20	4.74	4.50	3.32	g-cm²

General Data			
18 Thermal Resistance (rotor/body)	R_{th1}/R_{th2}	6/22	°C/W
19 Thermal Time Constant (rotor/stator)	t_{W1}/t_{W2}	9/550	S
20 Operating Temperature Range:	motor rotor	-30°C to 85°C (-22°F to 185°F) 100°C (212°F)	°C (°F) °C (°F)
21 Shaft Load Max.: (5 mm. from bearing)	 -radial -axial	With sleeve bearings 3.0 (10.8) 150 (539.5)	 N (oz) N (oz)
22 Shaft Play:	-radial -axial	<0.03 (0.0012) 0.15 (0.0059)	mm (inch) mm (inch)
23 Weight	g	53 (1.87)	g (oz)

Execution Table

Gearbox	Single Shaft	MR2	E9
R22	1001	1008	1005
K24	1001	1008	1005
K27	1001	1008	1005
R22HT	1024	Upon Request	1025

No Load Speed vs. Torque

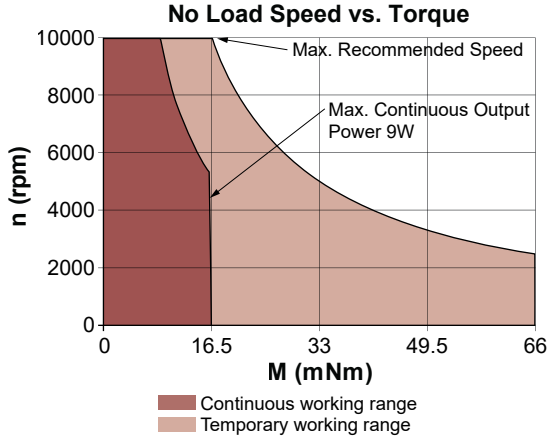

22S28

Ø 22 mm • Precious metal commutation • 4.1 mNm

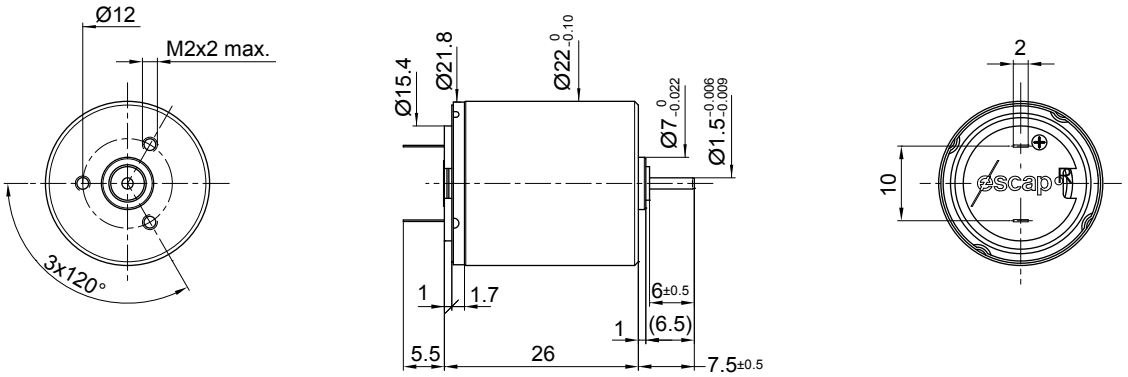

Dimensions in mm.

Electrical Data	Symbol	22S28 •••• .1 208E	205E	Unit
1 Nominal Voltage	V	15	24	Volt
2 No-Load Speed	n_0	9,600	7,940	rpm
3 No-Load Current	I_0	6.0	2.8	mA
4 Terminal Resistance	R	35.0	140.0	Ω
5 Output Power	$P_{2max.}$	2.5	2.4	W
6 Stall Torque	mNm	6.3 (0.9)	4.9 (0.7)	mNm (oz-in)
7 Efficiency	$h_{max.}$	78	76	%
8 Max Continuous Speed	$n_{e\ max.}$	10,000	10,000	rpm
9 Max Continuous Torque	$M_{e\ max.}$	4.1 (0.56)	3.9 (0.56)	mNm (oz-in)
10 Max Continuous Current	$I_{e\ max.}$	0.29	0.15	A
11 Back-EMF Constant	k_E	1.54	2.97	mV/rpm
12 Torque Constant	k_M	14.70	28.40	mNm/A
13 Motor Regulation	R/k^2	160.0	170.0	10^3/Nms
14 Friction Torque	T_F	0.09 (0.02)	0.08 (0.02)	mNm (oz-in)
15 Rotor Inductance	L	0.92	3.60	mH
16 Mechanical Time Constant	τ_m	25.6	25.5	ms
17 Rotor Inertia	J	1.60	1.50	g-cm²
General Data				
18 Thermal Resistance (rotor/body)	R_{th1}/R_{th2}	5/30		°C/W
19 Thermal Time Constant (rotor/stator)	t_{W1}/t_{W2}	5/480		S
20 Operating Temperature Range:	motor rotor	-30°C to 85°C (-22°F to 185°F) 100°C (212°F)		°C (°F) °C (°F)
21 Shaft Load Max.: (5 mm. from bearing)	 -radial -axial	With sleeve bearings 1.5 (5.4) 100 (359.6)		 N (oz) N (oz)
22 Shaft Play:	-radial -axial	<0.03 (0.0012) 0.15 (0.0059)		mm (inch) mm (inch)
23 Weight	g	49 (1.73)		g (oz)

Execution Table

Gearbox	Single Shaft	MR2
R22	Upon Request	Upon Request
K24	Upon Request	Upon Request
K27	Upon Request	Upon Request

No Load Speed vs. Torque

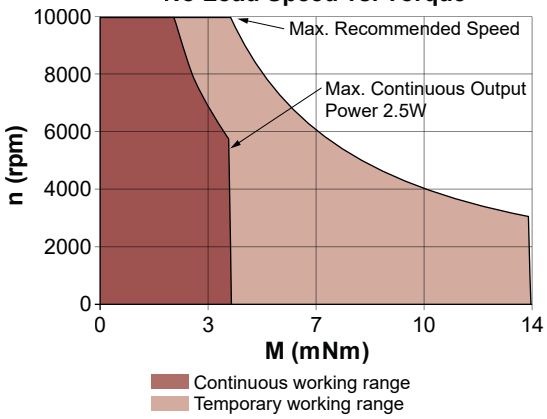

V092018 • © 2018 Portescap. Specifications subject to change without notice.

22S78

Ø 22 mm • Precious metal commutation • 8.9 mNm

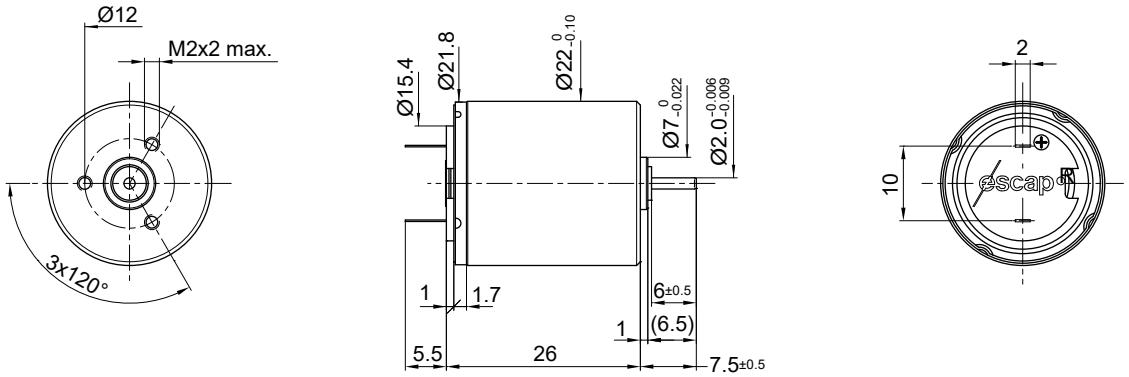

Dimensions in mm.

Electrical Data	Symbol	22S78 •••• .1 210E	22S78 •••• .1 208E	Unit
1 Nominal Voltage	V	18	24	Volt
2 No-Load Speed	n_0	7,780	8,550	rpm
3 No-Load Current	I_0	4.5	3.3	mA
4 Terminal Resistance	R	18.0	35.0	Ω
5 Output Power	$P_{2max.}$	5.5	4.6	W
6 Stall Torque	mNm	22 (3.12)	18.3 (2.6)	mNm (oz-in)
7 Efficiency	$h_{max.}$	87	87	%
8 Max Continuous Speed	$n_{e\ max.}$	10,000	10,000	rpm
9 Max Continuous Torque	$M_{e\ max.}$	8.9 (1.1)	7.7 (1.1)	mNm (oz-in)
10 Max Continuous Current	$I_{e\ max.}$	0.41	0.29	A
11 Back-EMF Constant	k_E	2.30	2.80	mV/rpm
12 Torque Constant	k_M	22.00	26.70	mNm/A
13 Motor Regulation	R/k^2	37.0	49.0	10^3/Nms
14 Friction Torque	T_F	0.09 (0.02)	0.09 (0.02)	mNm (oz-in)
15 Rotor Inductance	L	0.50	0.92	mH
16 Mechanical Time Constant	τ_m	7.0	7.8	ms
17 Rotor Inertia	J	1.90	1.60	g-cm²
General Data				
18 Thermal Resistance (rotor/body)	R_{th1}/R_{th2}	5/30		°C/W
19 Thermal Time Constant (rotor/stator)	t_{W1}/t_{W2}	5/480		S
20 Operating Temperature Range:	motor rotor	-30°C to 85°C (-22°F to 185°F) 100°C (212°F)		°C (°F) °C (°F)
21 Shaft Load Max.: (5 mm. from bearing)	 -radial -axial	With sleeve bearings 1.5 (5.4) 100 (359.6)		 N (oz) N (oz)
22 Shaft Play:	-radial -axial	<0.03 (0.0012) 0.15 (0.0059)		mm (inch) mm (inch)
23 Weight	g	49 (1.73)		g (oz)

Execution Table

Gearbox	Single Shaft
R22	1

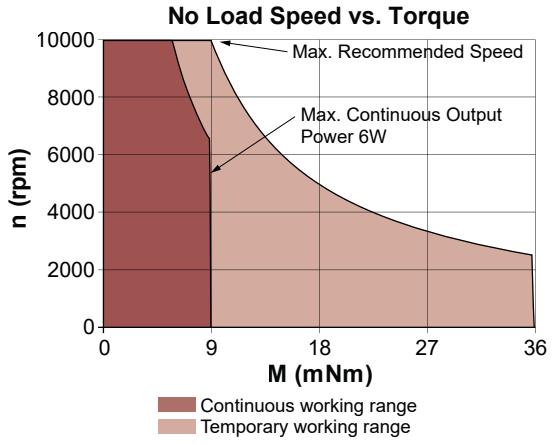

23GST2R82

Ø 23 mm • Graphite-Copper commutation • 22 mNm

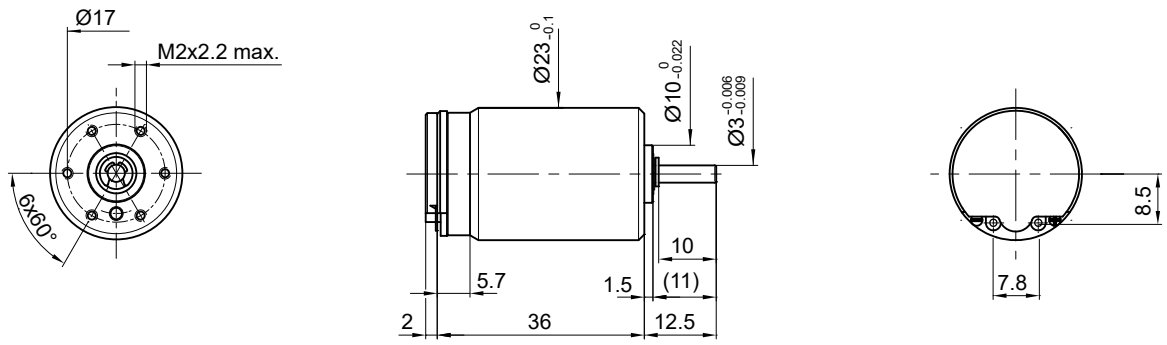

Dimensions in mm.

Electrical Data	Symbol	23GST2R82 •••• .1 216P	216E	Unit
1 Nominal Voltage	V	12	24	Volt
2 No-Load Speed	n_0	8,690	9,010	rpm
3 No-Load Current	I_0	90.0	60.0	mA
4 Terminal Resistance	R	2.0	6.9	Ω
5 Output Power	$P_{2max.}$	17.2	18.0	W
6 Stall Torque	mNm	80 (11.33)	87 (12.33)	mNm (oz-in)
7 Efficiency	$h_{max.}$	77	76	%
8 Max Continuous Speed	$n_{e\ max.}$	10,000	10,000	rpm
9 Max Continuous Torque	$M_{e\ max.}$	21 (3.12)	22 (3.12)	mNm (oz-in)
10 Max Continuous Current	$I_{e\ max.}$	1.70	0.90	A
11 Back-EMF Constant	k_E	1.36	2.62	mV/rpm
12 Torque Constant	k_M	13.00	25.00	mNm/A
13 Motor Regulation	R/k^2	12.0	11.0	10^3/Nms
14 Friction Torque	T_F	1.17 (0.17)	1.5 (0.22)	mNm (oz-in)
15 Rotor Inductance	L	0.08	0.30	mH
16 Mechanical Time Constant	τ_m	5.6	5.2	ms
17 Rotor Inertia	J	4.70	4.70	g-cm²
General Data				
18 Thermal Resistance (rotor/body)	R_{th1}/R_{th2}	7/16		°C/W
19 Thermal Time Constant (rotor/stator)	t_{W1}/t_{W2}	12/460		S
20 Operating Temperature Range:	motor rotor	-30°C to 85°C (-22°F to 185°F) 100°C (212°F)		°C (°F) °C (°F)
21 Shaft Load Max.: (5 mm. from bearing)	 -radial -axial	With ball bearings 6.0 (21.6) 250 (899.2)		 N (oz) N (oz)
22 Shaft Play:	-radial -axial	<0.03 (0.0012) 0.15 (0.0059)		mm (inch) mm (inch)
23 Weight	g	80 (2.83)		g (oz)

Execution Table

Gearbox	Single Shaft	MR2	E9
R22	2	Upon Request	Upon Request
K27	2	Upon Request	Upon Request
R22HT	11	12	Upon Request

No Load Speed vs. Torque

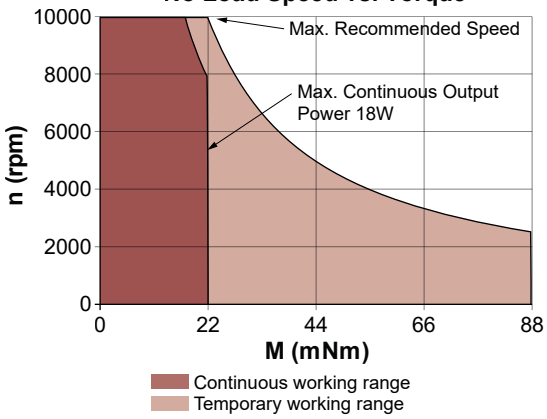

V092018 • © 2018 Portescap. Specifications subject to change without notice.

24DCT Athlonix™

Ø 24 mm • Precious metal commutation • 14.97 mNm

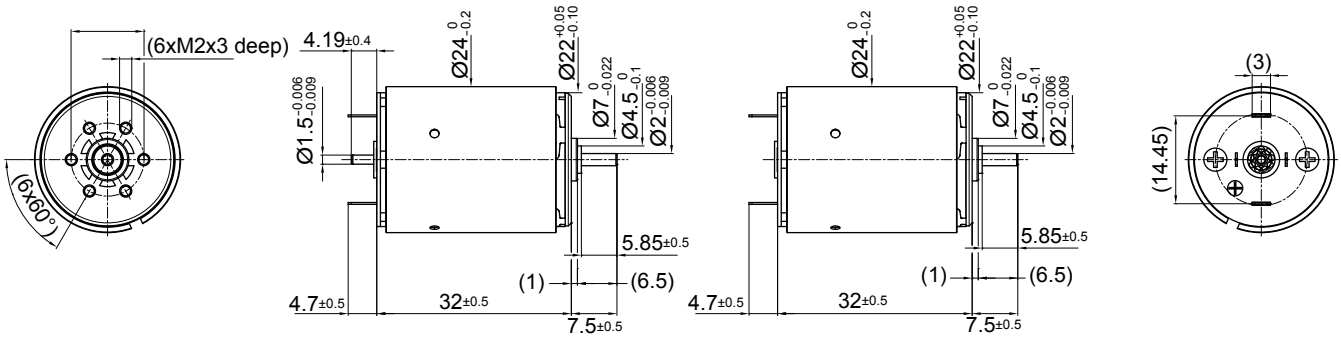

24DCT 32P2 •••• .2 **24DCT 32P1 •••• .14**

Dimensions in mm.

Electrical Data		Symbol	24DCT 32P1/P2 •••• .*						Unit
			226P	221P	216P	215P	213P	212P	
1	Nominal Voltage	V	3	6	9	12	15	18	Volt
2	No-Load Speed	n_0	5718	7365	6444	7641	7368	7370	rpm
3	No-Load Current	I_0	44.1	28.4	16.6	14.7	11.4	8.6	mA
4	Terminal Resistance	R	0.4	0.7	2.0	2.5	4.1	5.9	Ω
5	Output Power	$P_{2max.}$	5.3	8.5	7.5	9.4	9.1	9.1	W
6	Stall Torque	mNm	40.6 (5.75)	63.07 (8.94)	60.34 (8.55)	71.54 (10.14)	70.38 (9.97)	70.35 (9.97)	mNm (oz-in)
7	Efficiency	$h_{max.}$	86	89	88	89	89	90	%
8	Max Continuous Speed	$n_{e\ max.}$	10000	10000	10000	10000	10000	10000	rpm
9	Max Continuous Torque	$M_{e\ max.}$	12.86 (1.83)	14.15 (2.01)	14.81 (2.1)	14.81 (2.1)	14.96 (2.12)	14.97 (2.13)	mNm (oz-in)
10	Max Continuous Current	$I_{e\ max.}$	2.62	1.85	1.13	1.00	0.78	0.65	A
11	Back-EMF Constant	k_E	0.52	0.81	1.39	1.57	2.03	2.44	mV/rpm
12	Torque Constant	k_M	4.98	7.75	13.29	14.95	19.38	23.26	mNm/A
13	Motor Regulation	R/k^2	14.75	12.23	11.18	11.18	10.96	10.97	10^3/Nms
14	Friction Torque	T_F	0.22 (0.04)	0.22 (0.04)	0.22 (0.04)	0.22 (0.04)	0.22 (0.04)	0.22 (0.04)	mNm (oz-in)
15	Mechanical Time Constant	τ_m	6.97	5.87	5.34	5.28	5.20	5.16	ms
16	Rotor Inertia	J	4.73	4.80	4.78	4.72	4.74	4.70	g-cm²

General Data				
18	Thermal Resistance (rotor/body)	R_{th1}/R_{th2}	6/22	°C/W
19	Thermal Time Constant (rotor/stator)	t_{W1}/t_{W2}	9/550	S
20	Operating Temperature Range:	motor rotor	-30°C to 85°C (-22°F to 185°F) 100°C (212°F)	°C (°F) °C (°F)
21	Shaft Load Max.: (5 mm. from bearing)	 -radial -axial	With sleeve bearings 3 (10.79) 100 (359.6)	 N (oz) N (oz)
22	Shaft Play:	-radial -axial	0.03 (0.0012) 0.15 (0.0059)	mm (inch) mm (inch)
23	Weight	g	72 (2.54)	g (oz)

*Also available with ball bearing

Execution Table

Gearbox	Single Shaft	MR2	E9
R22	4	5	6
K24	7	8	9
K27	1	2	3
R22HT	11	Upon Request	Upon Request

Note:
P1: standard commutation
P2: special commutation for double shaft version

No Load Speed vs. Torque

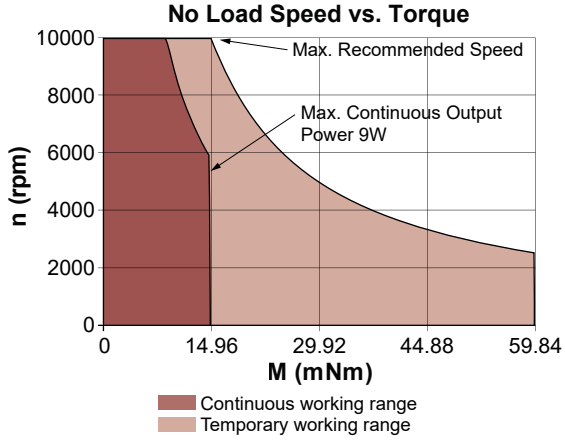

24DCT Athlonix™

Ø 24 mm • Precious metal commutation • 14.97 mNm

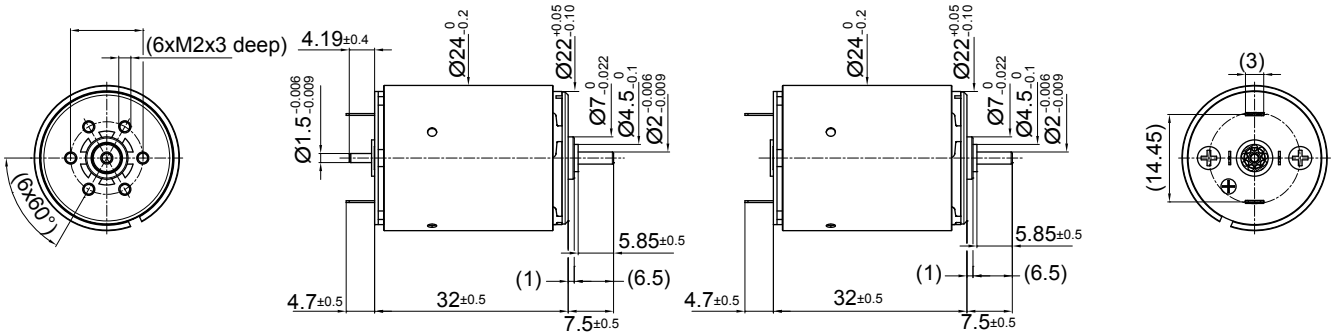

24DCT 32P2 •••• .2 **24DCT 32P1 •••• .14**

Dimensions in mm.

Electrical Data	Symbol	24DCT 32P1/P2 •••• .*					Unit
		215E	214E	213E	212E	210E	
1 Nominal Voltage	V	21	24	30	36	48	Volt
2 No-Load Speed	n_0	6980	7076	7837	7837	7631	rpm
3 No-Load Current	I_0	7.7	6.8	6.0	5.0	3.7	mA
4 Terminal Resistance	R	9.9	12.8	16.2	23.4	46.1	Ω
5 Output Power	$P_{2max.}$	8.0	8.0	9.2	9.2	8.6	W
6 Stall Torque	mNm	60.64 (8.59)	60.51 (8.57)	67.38 (9.55)	66.95 (9.49)	62.1 (8.8)	mNm (oz-in)
7 Efficiency	$h_{max.}$	88	88	89	89	88	%
8 Max Continuous Speed	$n_{e\ max.}$	10000	10000	10000	10000	10000	rpm
9 Max Continuous Torque	$M_{e\ max.}$	14.25 (2.02)	14.14 (2.01)	14.18 (2.01)	14.13 (2.01)	13.79 (1.96)	mNm (oz-in)
10 Max Continuous Current	$I_{e\ max.}$	0.50	0.44	0.39	0.32	0.23	A
11 Back-EMF Constant	k_E	3.00	3.38	3.82	4.58	6.27	mV/rpm
12 Torque Constant	k_M	28.63	32.27	36.44	43.72	59.86	mNm/A
13 Motor Regulation	R/k^2	12.05	12.24	12.18	12.26	12.87	10^3/Nms
14 Friction Torque	T_F	0.22 (0.04)	0.22 (0.04)	0.22 (0.04)	0.22 (0.04)	0.22 (0.04)	mNm (oz-in)
15 Mechanical Time Constant	τ_m	5.80	5.78	5.77	5.76	5.75	ms
16 Rotor Inertia	J	4.81	4.72	4.74	4.70	4.47	g-cm²

General Data			
18 Thermal Resistance (rotor/body)	R_{th1}/R_{th2}	6/22	°C/W
19 Thermal Time Constant (rotor/stator)	t_{W1}/t_{W2}	9/550	S
20 Operating Temperature Range:	motor rotor	-30°C to 85°C (-22°F to 185°F) 100°C (212°F)	°C (°F) °C (°F)
21 Shaft Load Max.: (5 mm. from bearing)	 -radial -axial	With sleeve bearings 3 (10.79) 100 (359.6)	 N (oz) N (oz)
22 Shaft Play:	-radial -axial	0.03 (0.0012) 0.15 (0.0059)	mm (inch) mm (inch)
23 Weight	g	72 (2.54)	g (oz)

*Also available with ball bearing

Execution Table

Gearbox	Single Shaft	MR2	E9
R22	4	5	6
K24	7	8	9
K27	1	2	3
R22HT	11	Upon Request	Upon Request

Note:
P1: standard commutation
P2: special commutation for double shaft version

No Load Speed vs. Torque

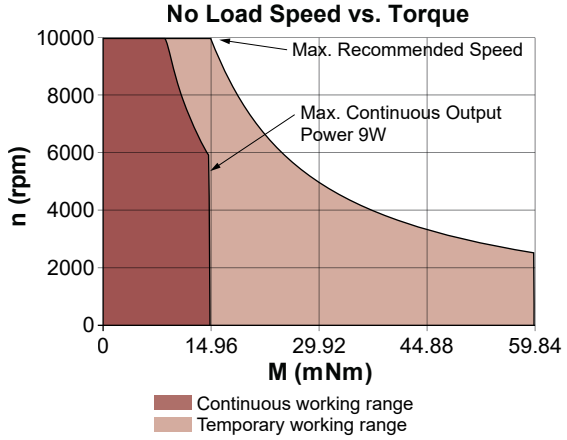

V092018 • © 2018 Portescap. Specifications subject to change without notice.

24DCT Athlonix™

Ø 24 mm • Graphite-Copper commutation • 14.47 mNm

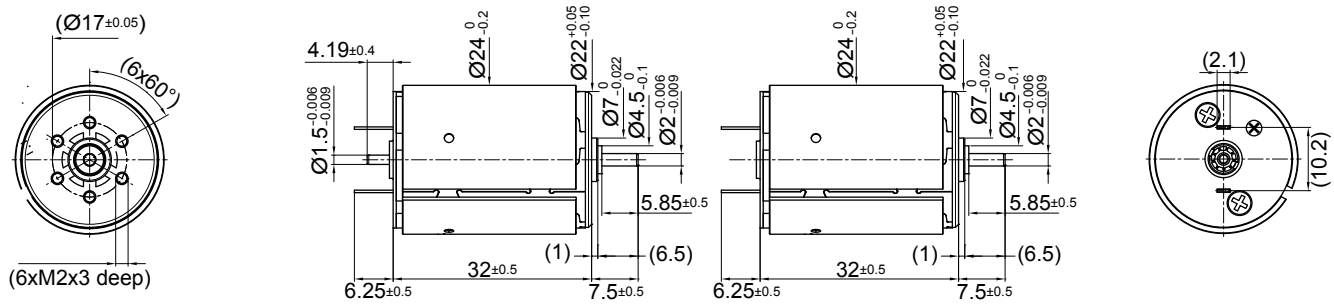

24DCT 32G2 •••• .2 **24DCT 32G1 •••• .1**

Dimensions in mm.

Electrical Data		Symbol	24DCT 32G1/G2 •••• .*						Unit
			226P	221P	216P	215P	213P	212P	
1	Nominal Voltage	V	3	6	9	12	15	18	Volt
2	No-Load Speed	n_0	5651	7324	6414	7613	7342	7342	rpm
3	No-Load Current	I_0	90.3	58.0	33.9	30.1	23.2	19.3	mA
4	Terminal Resistance	R	0.6	0.9	2.2	2.7	4.3	6.1	Ω
5	Output Power	$P_{2max.}$	3.6	7.1	6.9	8.8	8.7	8.8	W
6	Stall Torque	mNm	25.95 (3.68)	49.3 (6.99)	54.54 (7.73)	66 (9.35)	66.88 (9.48)	67.8 (9.61)	mNm (oz-in)
7	Efficiency	$h_{max.}$	76	82	83	84	84	84	%
8	Max Continuous Speed	$n_{e\ max.}$	10000	10000	10000	10000	10000	10000	rpm
9	Max Continuous Torque	$M_{e\ max.}$	10.07 (1.43)	12.29 (1.75)	13.87 (1.97)	14.01 (1.99)	14.37 (2.04)	14.47 (2.05)	mNm (oz-in)
10	Max Continuous Current	$I_{e\ max.}$	2.11	1.64	1.07	0.96	0.76	0.64	A
11	Back-EMF Constant	k_E	0.52	0.81	1.39	1.57	2.03	2.44	mV/rpm
12	Torque Constant	k_M	4.98	7.75	13.29	14.95	19.38	23.26	mNm/A
13	Motor Regulation	R/k^2	22.80	15.56	12.31	12.08	11.49	11.34	10^3/Nms
14	Friction Torque	T_F	0.45 (0.07)	0.45 (0.07)	0.45 (0.07)	0.45 (0.07)	0.45 (0.07)	0.45 (0.07)	mNm (oz-in)
15	Mechanical Time Constant	τ_m	10.78	7.47	5.88	5.70	5.45	5.33	ms
16	Rotor Inertia	J	4.73	4.80	4.78	4.72	4.74	4.70	g-cm²

General Data				
18	Thermal Resistance (rotor/body)	R_{th1}/R_{th2}	6/22	°C/W
19	Thermal Time Constant (rotor/stator)	t_{W1}/t_{W2}	9/550	S
20	Operating Temperature Range:	motor rotor	-30°C to 85°C (-22°F to 185°F) 100°C (212°F)	°C (°F) °C (°F)
21	Shaft Load Max.: (5 mm. from bearing)	 -radial -axial	With sleeve bearings 3 (10.79) 100 (359.6)	 N (oz) N (oz)
22	Shaft Play:	-radial -axial	0.03 (0.0012) 0.15 (0.0059)	mm (inch) mm (inch)
23	Weight	g	72 (2.54)	g (oz)

*Also available with ball bearing

Execution Table

Gearbox	Single Shaft	MR2	E9
R22	4	5	6
K24	7	8	9
K27	1	2	3
R22HT	11	Upon Request	Upon Request

Note:
G1: standard commutation
G2: special commutation for double shaft version

No Load Speed vs. Torque

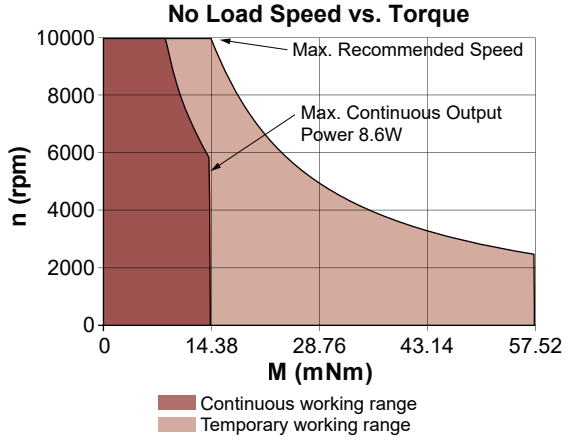

24DCT Athlonix™

Ø 24 mm • Graphite-Copper commutation • 14.47 mNm

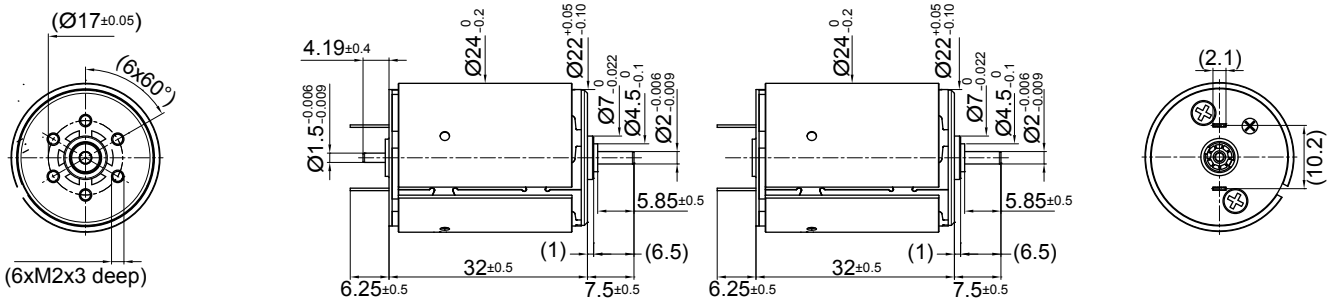

24DCT 32G2 •••• .2 **24DCT 32G1 •••• .1**

Dimensions in mm.

Electrical Data		Symbol	24DCT 32G1/G2 •••• .1					Unit
			215E	214E	213E	212E	210E	
1	Nominal Voltage	V	21	24	30	36	48	Volt
2	No-Load Speed	n_0	6952	7048	7810	7810	7602	rpm
3	No-Load Current	I_0	15.7	13.9	12.4	10.3	7.5	mA
4	Terminal Resistance	R	10.1	13.0	16.4	23.6	46.3	Ω
5	Output Power	$P_{2max.}$	7.7	7.8	9.0	9.0	8.4	W
6	Stall Torque	mNm	59.2 (8.39)	59.34 (8.41)	66.32 (9.4)	66.15 (9.37)	61.6 (8.73)	mNm (oz-in)
7	Efficiency	$h_{max.}$	83	83	84	84	84	%
8	Max Continuous Speed	$n_{e\ max.}$	10000	10000	10000	10000	10000	rpm
9	Max Continuous Torque	$M_{e\ max.}$	13.88 (1.97)	13.8 (1.96)	13.86 (1.97)	13.84 (1.97)	13.53 (1.92)	mNm (oz-in)
10	Max Continuous Current	$I_{e\ max.}$	0.50	0.44	0.39	0.32	0.23	A
11	Back-EMF Constant	k_E	3.00	3.38	3.82	4.58	6.27	mV/rpm
12	Torque Constant	k_M	28.63	32.27	36.44	43.72	59.86	mNm/A
13	Motor Regulation	R/k^2	12.30	12.44	12.33	12.36	12.92	10^3/Nms
14	Friction Torque	T_F	0.45 (0.07)	0.45 (0.07)	0.45 (0.07)	0.45 (0.07)	0.45 (0.07)	mNm (oz-in)
15	Mechanical Time Constant	τ_m	5.91	5.87	5.84	5.81	5.77	ms
16	Rotor Inertia	J	4.81	4.72	4.74	4.70	4.47	g-cm²

General Data				
18	Thermal Resistance (rotor/body)	R_{th1}/R_{th2}	6/22	°C/W
19	Thermal Time Constant (rotor/stator)	t_{W1}/t_{W2}	9/550	S
20	Operating Temperature Range:	motor rotor	-30°C to 85°C (-22°F to 185°F) 100°C (212°F)	°C (°F) °C (°F)
21	Shaft Load Max.: (5 mm. from bearing)	 -radial -axial	With sleeve bearings 3 (10.79) 100 (359.6)	 N (oz) N (oz)
22	Shaft Play:	-radial -axial	0.03 (0.0012) 0.15 (0.0059)	mm (inch) mm (inch)
23	Weight	g	72 (2.54)	g (oz)

*Also available with ball bearing

Execution Table

Gearbox	Single Shaft	MR2	E9
R22	4	5	6
K24	7	8	9
K27	1	2	3
R22HT	11	Upon Request	Upon Request

Note:
G1: standard commutation
G2: special commutation for double shaft version

No Load Speed vs. Torque

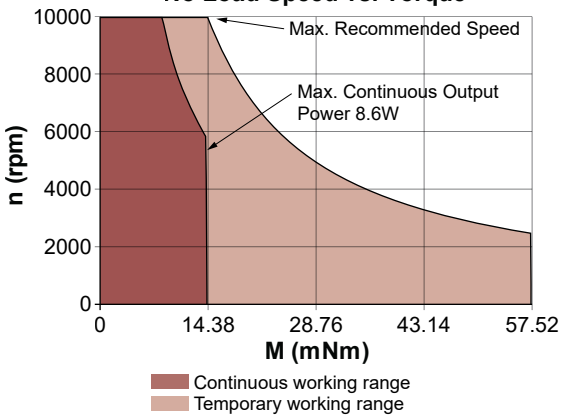

V092018 • © 2018 Portescap. Specifications subject to change without notice.

25GST2R82

Ø 25 mm • Graphite-Copper commutation • 33 mNm

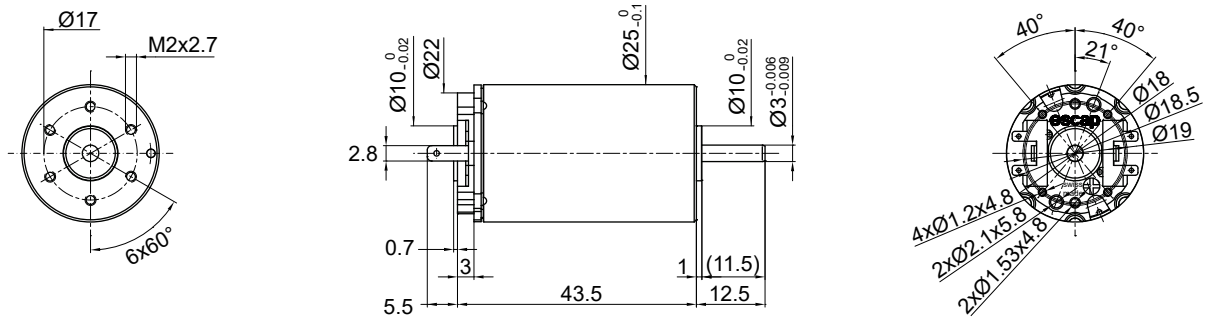

Dimensions in mm.

Electrical Data	Symbol	25GST2R82 •••• .1 228E	230E	216P	216E	Unit
1 Nominal Voltage	V	18	18	24	35	Volt
2 No-Load Speed	n_0	11,125	11,450	10,320	7,850	rpm
3 No-Load Current	I_0	110.0	110.0	70.0	40.0	mA
4 Terminal Resistance	R	1.6	1.3	3.3	12.5	Ω
5 Output Power	$P_{2max.}$	23.8	26.0	24.0	23.3	W
6 Stall Torque	mNm	172 (24.36)	206 (29.18)	160 (22.66)	118 (16.72)	mNm (oz-in)
7 Efficiency	$h_{max.}$	81	83	81	78	%
8 Max Continuous Speed	$n_{e\ max.}$	10,000	10,000	10,000	10,000	rpm
9 Max Continuous Torque	$M_{e\ max.}$	30 (4.68)	33 (4.68)	30 (4.25)	30 (4.25)	mNm (oz-in)
10 Max Continuous Current	$I_{e\ max.}$	2.10	2.30	1.45	0.75	A
11 Back-EMF Constant	k_E	1.60	1.56	2.30	4.40	mV/rpm
12 Torque Constant	k_M	15.30	14.90	22.00	42.00	mNm/A
13 Motor Regulation	R/k^2	6.9	5.9	6.8	7.10	10^3/Nms
14 Friction Torque	T_F	1.68 (0.24)	1.64 (0.24)	1.54 (0.22)	1.68 (0.24)	mNm (oz-in)
15 Rotor Inductance	L	0.10	0.10	0.10	0.80	mH
16 Mechanical Time Constant	τ_m	6.9	5.9	6.8	7.1	ms
17 Rotor Inertia	J	10.00	10.00	10.00	10.00	$g\text{-}cm^2$

General Data			
18 Thermal Resistance (rotor/body)	R_{th1}/R_{th2}	6/13	°C/W
19 Thermal Time Constant (rotor/stator)	t_{W1}/t_{W2}	10/450	S
20 Operating Temperature Range:	motor rotor	-30°C to 85°C (-22°F to 185°F) 100°C (212°F)	°C (°F) °C (°F)
21 Shaft Load Max.: (5 mm. from bearing)	 -radial -axial	With ball bearings 12.0 (43.2) 68 (244.59)	 N (oz) N (oz)
22 Shaft Play:	-radial -axial	<0.03 (0.0012) 0.15 (0.0059)	mm (inch) mm (inch)
23 Weight	g	111 (3.92)	g (oz)

Execution Table

Gearbox	Single Shaft	E9	HEDS	MR2
R32	1	2	4	Upon Request
R22HT	24	25	Upon Request	Upon Request

No Load Speed vs. Torque

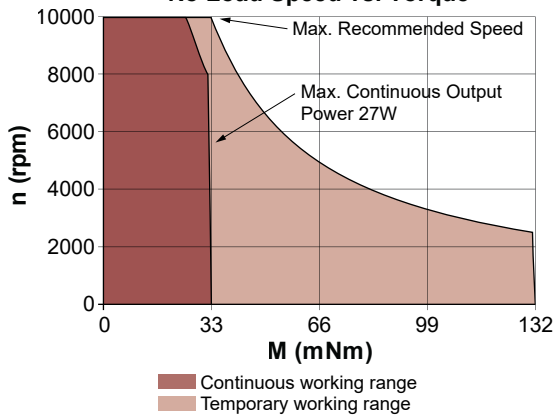

25GT2R82

Ø 25 mm • Graphite-Copper commutation • 47 mNm

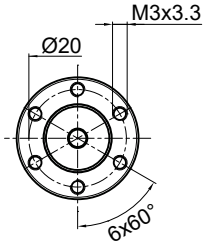

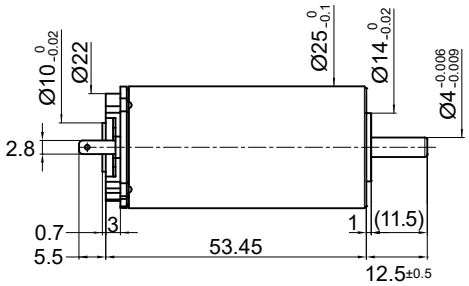

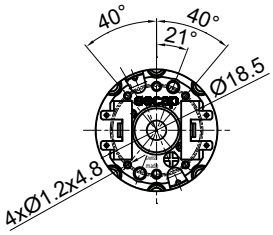

Dimensions in mm.

Electrical Data		Symbol	25GT2R82 •••• .1 222E	222P	230E	219E	Unit
1	Nominal Voltage	V	15	18	24	36	Volt
2	No-Load Speed	n_0	4,075	9,460	10,000	8,260	rpm
3	No-Load Current	I_0	80.0	140.0	120.0	65.0	mA
4	Terminal Resistance	R	4.0	1.3	1.8	7.4	Ω
5	Output Power	$P_{2max.}$	36.8	33.0	37.0	33.0	W
6	Stall Torque	mNm	129 (18.27)	249 (35.27)	315 (44.61)	194 (27.48)	mNm (oz-in)
7	Efficiency	$h_{max.}$	73	81	82	78	%
8	Max Continuous Speed	$n_{e\ max.}$	10,000	10,000	10,000	10,000	rpm
9	Max Continuous Torque	$M_{e\ max.}$	47 (5.95)	42 (5.95)	47 (6.67)	41 (5.81)	mNm (oz-in)
10	Max Continuous Current	$I_{e\ max.}$	1.44	2.50	2.20	1.06	A
11	Back-EMF Constant	k_E	3.60	1.88	2.40	4.30	mV/rpm
12	Torque Constant	k_M	34.40	18.00	23.00	41.10	mNm/A
13	Motor Regulation	R/k^2	3.4	4.0	4.2	4.40	10^3/Nms
14	Friction Torque	T_F	2.75 (0.39)	2.5 (0.36)	2.76 (0.4)	2.65 (0.38)	mNm (oz-in)
15	Rotor Inductance	L	0.30	0.08	0.14	0.50	mH
16	Mechanical Time Constant	τ_m	4.4	5.2	5.5	5.7	ms
17	Rotor Inertia	J	13.00	13.00	12.50	13.00	$g\text{-}cm^2$

General Data				
18	Thermal Resistance (rotor/body)	R_{th1}/R_{th2}	5/11	°C/W
19	Thermal Time Constant (rotor/stator)	t_{W1}/t_{W2}	10/450	S
20	Operating Temperature Range:	motor rotor	-30°C to 85°C (-22°F to 185°F) 100°C (212°F)	°C (°F) °C (°F)
21	Shaft Load Max.: (5 mm. from bearing)	 -radial -axial	With ball bearings 25.0 (89.9) 100 (359.69)	 N (oz) N (oz)
22	Shaft Play:	-radial -axial	<0.03 (0.0012) 0.15 (0.0059)	mm (inch) mm (inch)
23	Weight	g	145 (5.12)	g (oz)

Execution Table

Gearbox	Single Shaft	E9	HEDS	MR2
R32	6	8	–	Upon Request
R40	1	2	4	Upon Request
R22HT	20	21	Upon Request	Upon Request

No Load Speed vs. Torque

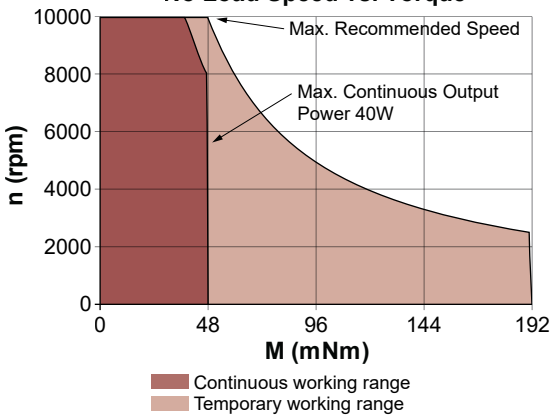

V092018 • © 2018 Portescap. Specifications subject to change without notice.

26N58

Ø 26 mm • Precious metal commutation • 17.9 mNm

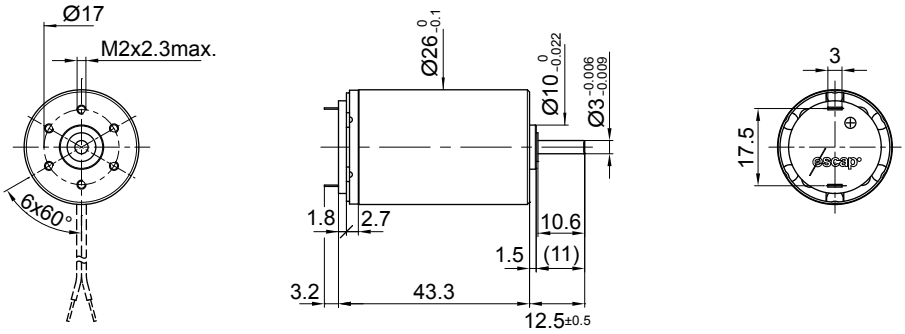

Dimensions in mm.

Electrical Data		Symbol	26N58 •••• .1				Unit
			216P	216E	113	110	
1	Nominal Voltage	V	6	12	15	24	Volt
2	No-Load Speed	n_0	4,600	4,735	5,470	6,660	rpm
3	No-Load Current	I_0	31.0	16.0	15.0	20.0	mA
4	Terminal Resistance	R	2.5	10.0	15.2	32.0	Ω
5	Output Power	$P_{2max.}$	6.2	6.0	5.2	4.6	W
6	Stall Torque	mNm	29.6 (4.2)	28.6 (4.06)	25 (3.55)	25 (3.55)	mNm (oz-in)
7	Efficiency	$h_{max.}$	79	78	77	70	%
8	Max Continuous Speed	$n_{e\ max.}$	8,000	8,000	8,000	8,000	rpm
9	Max Continuous Torque	$M_{e\ max.}$	17.9 (2.45)	17.3 (2.45)	15.1 (2.14)	13.3 (1.89)	mNm (oz-in)
10	Max Continuous Current	$I_{e\ max.}$	1.47	0.74	0.60	0.41	A
11	Back-EMF Constant	k_E	1.29	2.50	2.70	3.51	mV/rpm
12	Torque Constant	k_M	12.30	23.90	25.80	33.50	mNm/A
13	Motor Regulation	R/k^2	16.5	17.5	22.8	28.51	10^3/Nms
14	Friction Torque	T_F	0.38 (0.06)	0.38 (0.06)	0.38 (0.06)	0.38 (0.06)	mNm (oz-in)
15	Rotor Inductance	L	0.22	0.80	1.00	1.50	mH
16	Mechanical Time Constant	τ_m	9.9	10.5	13.7	17.1	ms
17	Rotor Inertia	J	6.00	6.00	6.00	6.00	g-cm²

General Data				
18	Thermal Resistance (rotor/body)	R_{th1}/R_{th2}	5/12	°C/W
19	Thermal Time Constant (rotor/stator)	t_{W1}/t_{W2}	10/640	S
20	Operating Temperature Range:	motor rotor	-30°C to 85°C (-22°F to 185°F) 100°C (212°F)	°C (°F) °C (°F)
21	Shaft Load Max.: (5 mm. from bearing)	 -radial -axial	With sleeve bearings 6.0 (21.6) 250 (899.2)	 N (oz) N (oz)
22	Shaft Play:	-radial -axial	<0.03 (0.0012) 0.15 (0.0059)	mm (inch) mm (inch)
23	Weight	g	114 (4.03)	g (oz)

Execution Table

Gearbox	Single Shaft	Double Shaft for E9
R22	5	9
K24	5	9
K27	5	9

No Load Speed vs. Torque

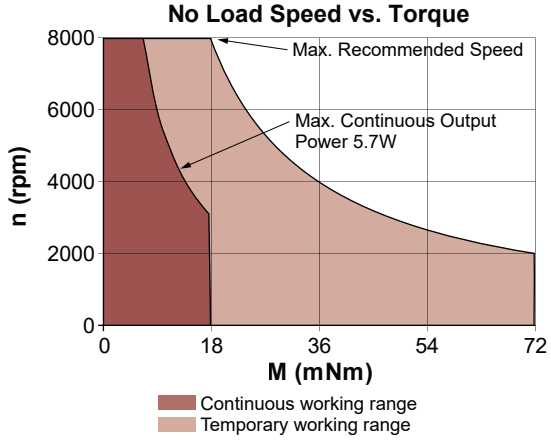

28DT12

Ø 28 mm • Graphite-Copper commutation • 41 mNm

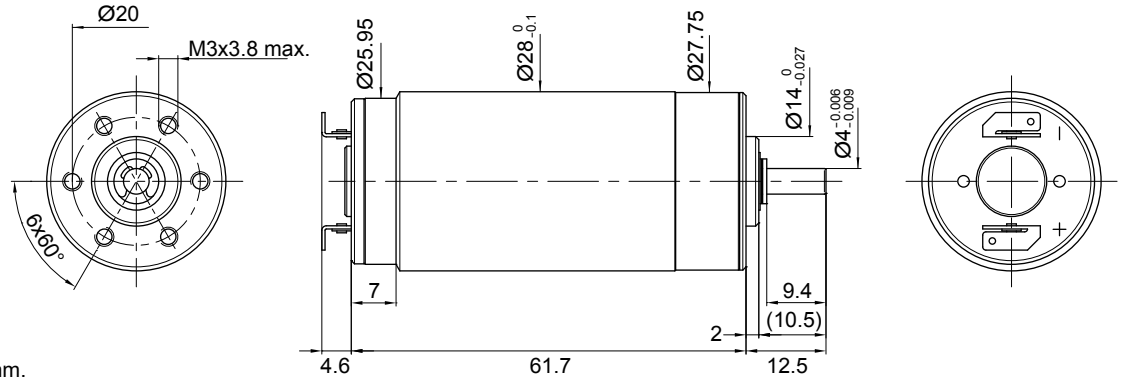

Dimensions in mm.

Electrical Data		Symbol	28DT12 •••• .1 222P	219P	222E	219E	Unit
1	Nominal Voltage	V	12	15	24	28	Volt
2	No-Load Speed	n_0	6,840	7,100	6,851	6,870	rpm
3	No-Load Current	I_0	210.0	180.0	110.0	90.0	mA
4	Terminal Resistance	R	1.9	2.9	6.2	9.9	Ω
5	Output Power	$P_{2max.}$	24.0	24.0	27.0	24.0	W
6	Stall Torque	mNm	102 (14.45)	101 (14.31)	126 (17.85)	107 (15.16)	mNm (oz-in)
7	Efficiency	$h_{max.}$	67	66	69	68	%
8	Max Continuous Speed	$n_{e\ max.}$	9,000	9,000	9,000	9,000	rpm
9	Max Continuous Torque	$M_{e\ max.}$	37 (5.1)	36 (5.1)	41 (5.81)	37 (5.24)	mNm (oz-in)
10	Max Continuous Current	$I_{e\ max.}$	2.50	2.00	1.40	1.10	A
11	Back-EMF Constant	k_E	1.70	2.04	3.40	3.95	mV/rpm
12	Torque Constant	k_M	16.20	19.50	32.50	37.70	mNm/A
13	Motor Regulation	R/k^2	7.0	8.0	6.0	7.00	10^3/Nms
14	Friction Torque	T_F	3.4 (0.49)	3.4 (0.49)	3.4 (0.49)	3.4 (0.49)	mNm (oz-in)
15	Rotor Inductance	L	0.20	0.30	0.75	1.10	mH
16	Mechanical Time Constant	τ_m	14.0	14.4	12.0	12.6	ms
17	Rotor Inertia	J	20.00	18.00	20.00	18.00	$g\text{-}cm^2$

General Data				
18	Thermal Resistance (rotor/body)	R_{th1}/R_{th2}	3.5/8	°C/W
19	Thermal Time Constant (rotor/stator)	t_{W1}/t_{W2}	18/630	S
20	Operating Temperature Range:	motor rotor	-30°C to 85°C (-22°F to 185°F) 100°C (212°F)	°C (°F) °C (°F)
21	Shaft Load Max.: (5 mm. from bearing)	 -radial -axial	With sleeve bearings 8.0 (28.8) 500 (1798.5)	 N (oz) N (oz)
22	Shaft Play:	-radial -axial	<0.025 (0.001) 0.15 (0.0059)	mm (inch) mm (inch)
23	Weight	g	200 (7.06)	g (oz)

Execution Table

Gearbox	Single Shaft	Double Shaft for E9	HEDS
R32	4	106	103
R40	1	98	Upon Request

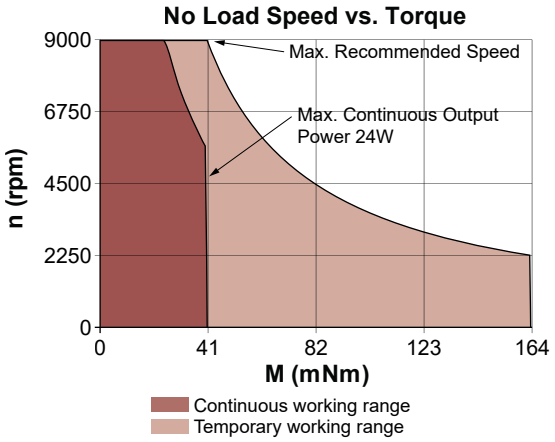

V092018 • © 2018 Portescap. Specifications subject to change without notice.

28L28

Ø 28 mm • Precious metal commutation • 21 mNm

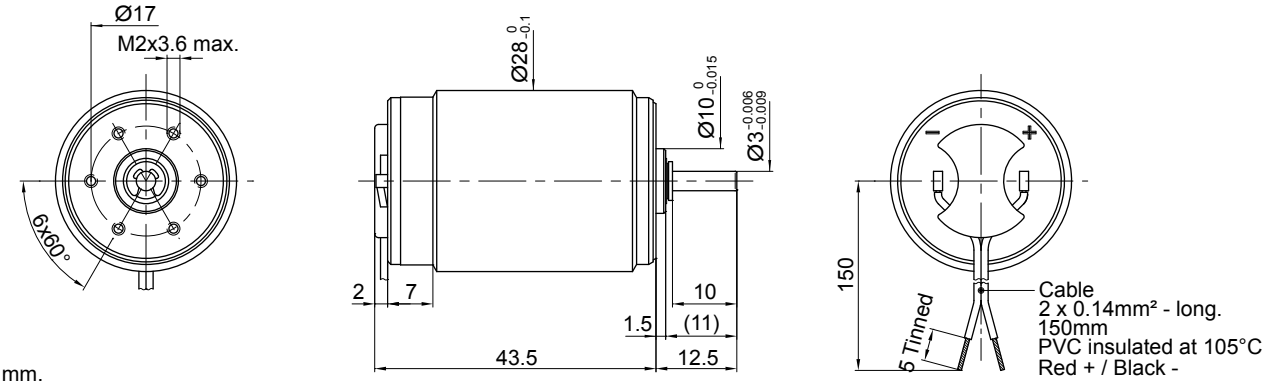

Dimensions in mm.

Electrical Data		Symbol	28L28 •••• .49 219	416E	413E	410E	Unit
1	Nominal Voltage	V	12	24	28	36	Volt
2	No-Load Speed	n_0	5,300	5,590	5,325	5,000	rpm
3	No-Load Current	I_0	22.0	11.0	9.0	6.6	mA
4	Terminal Resistance	R	6.0	19.5	33.0	71.0	Ω
5	Output Power	$P_{2max.}$	9.6	10.0	9.3	9.0	W
6	Stall Torque	mNm	43 (6.09)	50 (7.09)	32 (4.54)	34 (4.82)	mNm (oz-in)
7	Efficiency	$h_{max.}$	80	82	80	78	%
8	Max Continuous Speed	$n_{e\ max.}$	8,000	8,000	8,000	8,000	rpm
9	Max Continuous Torque	$M_{e\ max.}$	19.9 (2.98)	21 (2.98)	19.4 (2.75)	18.5 (2.62)	mNm (oz-in)
10	Max Continuous Current	$I_{e\ max.}$	0.95	0.53	0.40	0.28	A
11	Back-EMF Constant	k_E	2.24	4.26	5.20	7.10	mV/rpm
12	Torque Constant	k_M	21.40	40.70	49.70	67.80	mNm/A
13	Motor Regulation	R/k^2	13.0	12.0	13.2	15.20	10^3/Nms
14	Friction Torque	T_F	0.47 (0.07)	0.45 (0.07)	0.45 (0.07)	0.45 (0.07)	mNm (oz-in)
15	Rotor Inductance	L	0.50	2.40	3.20	5.20	mH
16	Mechanical Time Constant	τ_m	13.5	21.0	17.8	16.7	ms
17	Rotor Inertia	J	10.40	17.50	13.50	11.00	$g\text{-}cm^2$

General Data				
18	Thermal Resistance (rotor/body)	R_{th1}/R_{th2}	5/12	°C/W
19	Thermal Time Constant (rotor/stator)	t_{W1}/t_{W2}	13/760	S
20	Operating Temperature Range:	motor rotor	-30°C to 85°C (-22°F to 185°F) 100°C (212°F)	°C (°F) °C (°F)
21	Shaft Load Max.: (5 mm. from bearing)		With sleeve bearings	
		-radial	6.0 (21.6)	N (oz)
		-axial	250 (899.2)	N (oz)
22	Shaft Play:	-radial -axial	<0.18 (0.0007) 0.15 (0.0059)	mm (inch) mm (inch)
23	Weight	g	125 (4.41)	g (oz)

Execution Table

Gearbox	Single Shaft	Double Shaft for E9
R22	164	317
R32	49	315

No Load Speed vs. Torque

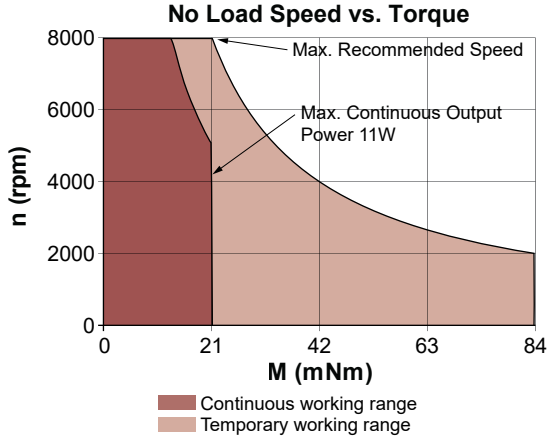

28LT12

Ø 28 mm • Graphite-Copper commutation • 24 mNm

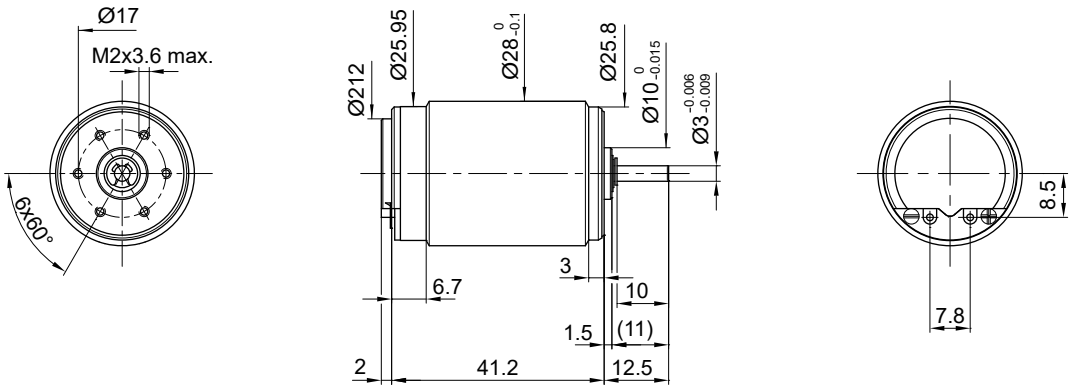

Dimensions in mm.

Electrical Data		Symbol	28LT12 •••• .49 219	28LT12 •••• .49 416E	Unit
1	Nominal Voltage	V	18	32	Volt
2	No-Load Speed	n_0	7,860	7,345	rpm
3	No-Load Current	I_0	65.0	35.0	mA
4	Terminal Resistance	R	6.2	19.9	Ω
5	Output Power	$P_{2max.}$	19.0	20.0	W
6	Stall Torque	mNm	63 (8.93)	65 (9.21)	mNm (oz-in)
7	Efficiency	$h_{max.}$	72	73	%
8	Max Continuous Speed	$n_{e\ max.}$	10,000	10,000	rpm
9	Max Continuous Torque	$M_{e\ max.}$	23 (3.4)	24 (3.4)	mNm (oz-in)
10	Max Continuous Current	$I_{e\ max.}$	1.13	0.63	A
11	Back-EMF Constant	k_E	2.24	4.26	mV/rpm
12	Torque Constant	k_M	21.40	40.70	mNm/A
13	Motor Regulation	R/k^2	13.0	12.0	10^3/Nms
14	Friction Torque	T_F	1.39 (0.2)	1.42 (0.21)	mNm (oz-in)
15	Rotor Inductance	L	0.50	2.40	mH
16	Mechanical Time Constant	τ_m	13.9	21.4	ms
17	Rotor Inertia	J	10.70	17.80	g-cm²

General Data				
18	Thermal Resistance (rotor/body)	R_{th1}/R_{th2}	5/12	°C/W
19	Thermal Time Constant (rotor/stator)	t_{W1}/t_{W2}	27/760	S
20	Operating Temperature Range:	motor rotor	-30°C to 85°C (-22°F to 185°F) 100°C (212°F)	°C (°F) °C (°F)
21	Shaft Load Max.: (5 mm. from bearing)	 -radial -axial	With sleeve bearings 6.0 (21.6) 250 (899.2)	 N (oz) N (oz)
22	Shaft Play:	-radial -axial	<0.018 (0.0007) 0.15 (0.0059)	mm (inch) mm (inch)
23	Weight	g	135 (4.77)	g (oz)

Execution Table

Gearbox	Single Shaft	Double Shaft for E9
R22	164	319
R32	49	316

No Load Speed vs. Torque

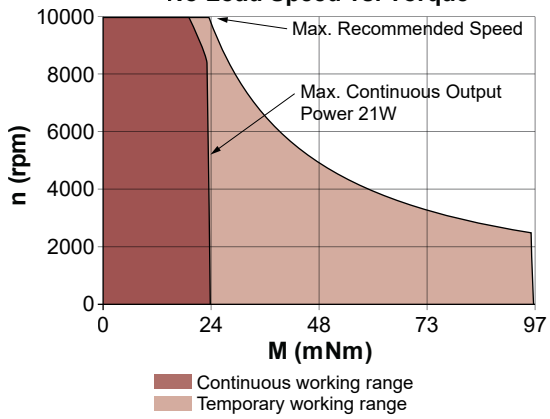

V092018 • © 2018 Portescap. Specifications subject to change without notice.

30GT2R82

Ø 30 mm • Graphite-Copper commutation • 92 mNm

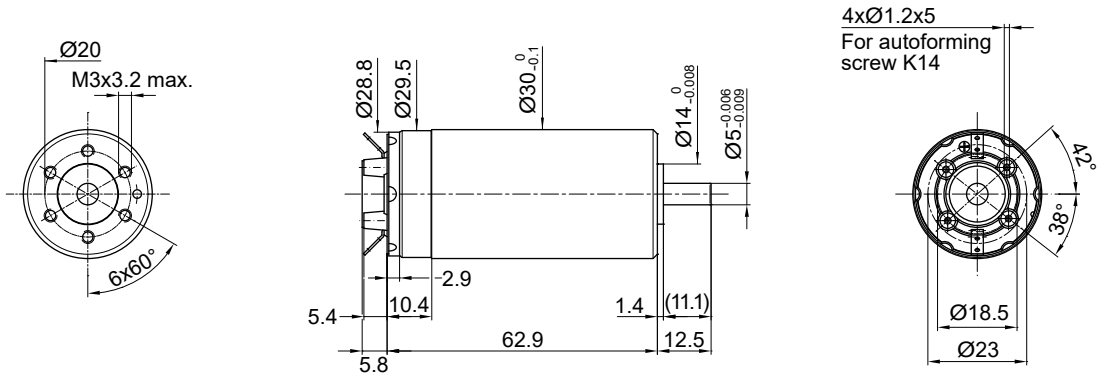

Dimensions in mm.

Electrical Data		Symbol	30GT2R82 •••• .4 234P	234E	Unit
1	Nominal Voltage	V	15	35	Volt
2	No-Load Speed	n_0	7,090	8,600	rpm
3	No-Load Current	I_0	180.0	90.0	mA
4	Terminal Resistance	R	0.5	1.6	Ω
5	Output Power	$P_{2max.}$	77.0	82.0	W
6	Stall Torque	mNm	628 (88.94)	847 (119.95)	mNm (oz-in)
7	Efficiency	$h_{max.}$	85	88	%
8	Max Continuous Speed	$n_{e\ max.}$	10,000	10,000	rpm
9	Max Continuous Torque	$M_{e\ max.}$	87 (13.03)	92 (13.03)	mNm (oz-in)
10	Max Continuous Current	$I_{e\ max.}$	4.50	2.50	A
11	Back-EMF Constant	k_E	2.10	4.05	mV/rpm
12	Torque Constant	k_M	20.10	38.70	mNm/A
13	Motor Regulation	R/k^2	1.2	1.1	10^3/Nms
14	Friction Torque	T_F	3.62 (0.52)	3.48 (0.5)	mNm (oz-in)
15	Rotor Inductance	L	0.06	0.24	mH
16	Mechanical Time Constant	τ_m	4.0	3.6	ms
17	Rotor Inertia	J	33.00	33.00	g-cm²
General Data					
18	Thermal Resistance (rotor/body)	R_{th1}/R_{th2}	4.5/9		°C/W
19	Thermal Time Constant (rotor/stator)	t_{W1}/t_{W2}	18/630		S
20	Operating Temperature Range:	motor rotor	-30°C to 85°C (-22°F to 185°F) 100°C (212°F)		°C (°F) °C (°F)
21	Shaft Load Max.: (5 mm. from bearing)	 -radial -axial	With ball bearings 35.0 (125.9) 100 (359.6)		 N (oz) N (oz)
22	Shaft Play:	-radial -axial	negligible negligible		mm (inch) mm (inch)
23	Weight	g	310 (10.94)		g (oz)

Execution Table

Gearbox	Single Shaft	E9	HEDS
R32	4	5	20
R40	4	5	Upon Request

No Load Speed vs. Torque

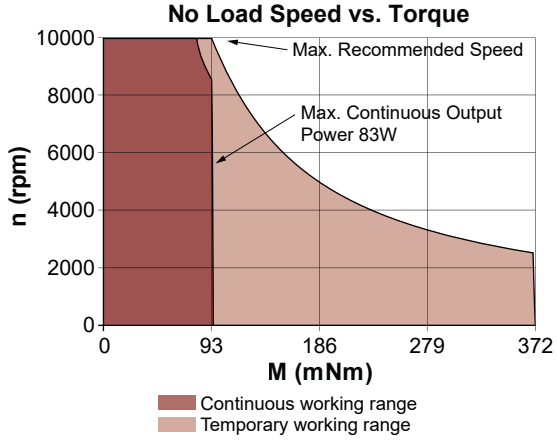

35NT2R32

Ø 35 mm • Graphite-Copper commutation • 56 mNm

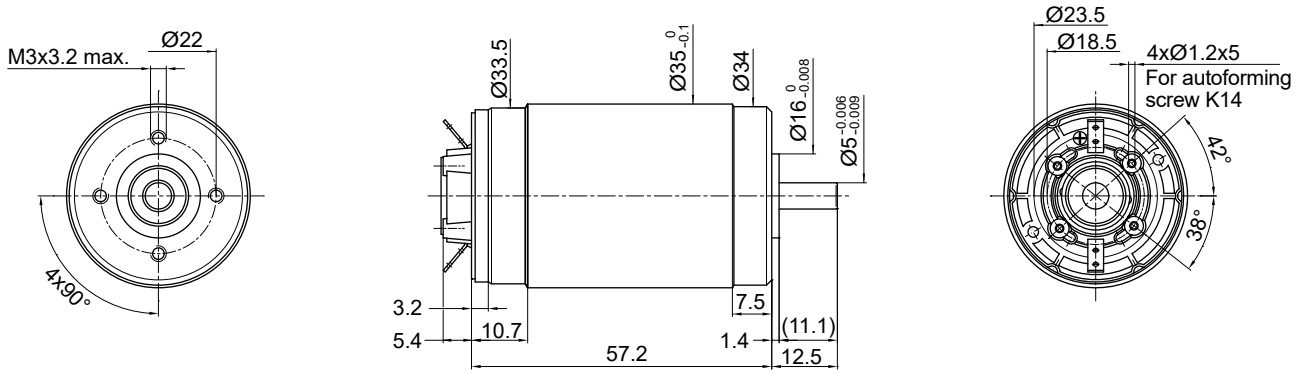

Dimensions in mm.

Electrical Data		Symbol	35NT2R32 •••• .1 228P	228E	416SP	Unit
1	Nominal Voltage	V	9	15	24	Volt
2	No-Load Speed	n_0	5,020	4,315	4,365	rpm
3	No-Load Current	I_0	180.0	90.0	50.0	mA
4	Terminal Resistance	R	1.0	3.6	8.3	Ω
5	Output Power	$P_{2max.}$	33.0	33.0	35.0	W
6	Stall Torque	mNm	151 (21.39)	137 (19.41)	150 (21.25)	mNm (oz-in)
7	Efficiency	$h_{max.}$	74	73	75	%
8	Max Continuous Speed	$n_{e\ max.}$	9,000	9,000	9,000	rpm
9	Max Continuous Torque	$M_{e\ max.}$	52 (7.65)	54 (7.65)	56 (7.94)	mNm (oz-in)
10	Max Continuous Current	$I_{e\ max.}$	3.30	1.75	1.18	A
11	Back-EMF Constant	k_E	1.76	3.40	5.40	mV/rpm
12	Torque Constant	k_M	16.80	32.50	51.60	mNm/A
13	Motor Regulation	R/k^2	3.5	3.4	3.1	10^3/Nms
14	Friction Torque	T_F	3 (0.43)	2.93 (0.42)	2.6 (0.37)	mNm (oz-in)
15	Rotor Inductance	L	0.13	0.52	1.30	mH
16	Mechanical Time Constant	τ_m	16.8	16.3	16.2	ms
17	Rotor Inertia	J	48.00	48.00	52.00	g-cm²

General Data				
18	Thermal Resistance (rotor/body)	R_{th1}/R_{th2}	4/8	°C/W
19	Thermal Time Constant (rotor/stator)	t_{W1}/t_{W2}	40/920	S
20	Operating Temperature Range:	motor rotor	-30°C to 85°C (-22°F to 185°F) 100°C (212°F)	°C (°F) °C (°F)
21	Shaft Load Max.: (5 mm. from bearing)	 -radial -axial	With ball bearings 35.0 (125.9) 100 (359.6)	 N (oz) N (oz)
22	Shaft Play:	-radial -axial	negligible negligible	mm (inch) mm (inch)
23	Weight	g	310 (10.94)	g (oz)

Execution Table

Gearbox	Single Shaft	E9	HEDS
R32	54	66	Upon Request
R40	1	96	Upon Request

No Load Speed vs. Torque

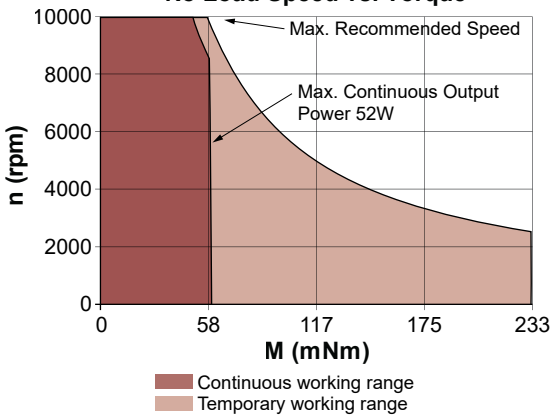

V092018 • © 2018 Portescap. Specifications subject to change without notice.

35NT2R82

Ø 35 mm • Graphite-Copper commutation • 114 mNm

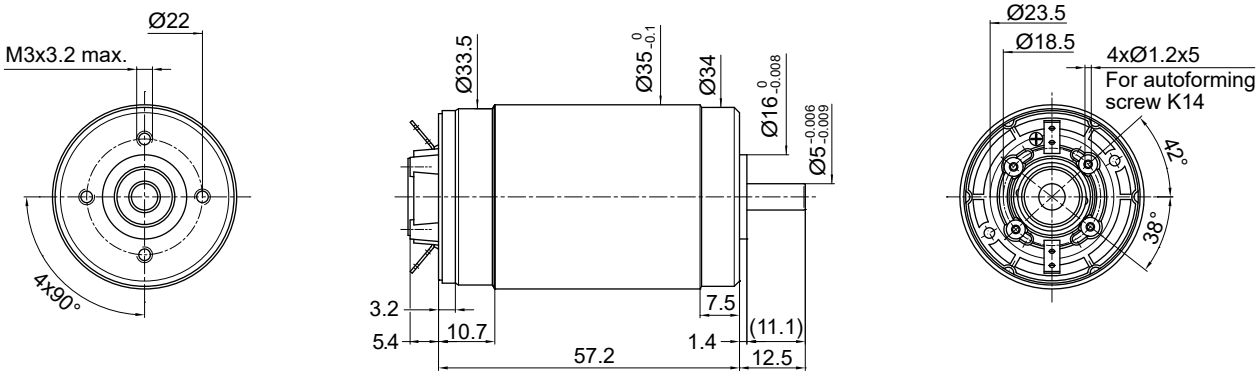

Dimensions in mm.

Electrical Data	Symbol	35NT2R82 •••• .1 426P	226E	426SP	426E	Unit
1 Nominal Voltage	V	18	28	32	60	Volt
2 No-Load Speed	n_0	6,765	6,935	5,850	5,760	rpm
3 No-Load Current	I_0	141.0	80.0	80.0	40.0	mA
4 Terminal Resistance	R	0.6	1.6	2.2	7.7	Ω
5 Output Power	$P_{2max.}$	102.0	91.0	103.0	107.0	W
6 Stall Torque	mNm	828 (117.26)	676 (95.73)	756 (107.06)	782 (110.75)	mNm (oz-in)
7 Efficiency	$h_{max.}$	87	87	86	86	%
8 Max Continuous Speed	$n_{e\ max.}$	9,000	9,000	9,000	9,000	rpm
9 Max Continuous Torque	$M_{e\ max.}$	108 (13.74)	97 (13.74)	109 (15.44)	114 (16.15)	mNm (oz-in)
10 Max Continuous Current	$I_{e\ max.}$	4.40	2.60	2.20	1.19	A
11 Back-EMF Constant	k_E	2.65	4.02	5.45	10.37	mV/rpm
12 Torque Constant	k_M	25.30	38.40	52.00	99.00	mNm/A
13 Motor Regulation	R/k^2	0.9	1.1	0.8	0.77	10^3/Nms
14 Friction Torque	T_F	3.57 (0.51)	3.07 (0.44)	4.16 (0.59)	3.96 (0.57)	mNm (oz-in)
15 Rotor Inductance	L	0.10	0.22	0.40	1.70	mH
16 Mechanical Time Constant	τ_m	6.1	5.9	5.9	5.5	ms
17 Rotor Inertia	J	71.40	54.00	71.40	71.40	g-cm²

General Data			
18 Thermal Resistance (rotor/body)	R_{th1}/R_{th2}	4/8	°C/W
19 Thermal Time Constant (rotor/stator)	t_{W1}/t_{W2}	40/920	S
20 Operating Temperature Range:	motor rotor	-30°C to 85°C (-22°F to 185°F) 100°C (212°F)	°C (°F) °C (°F)
21 Shaft Load Max.: (5 mm. from bearing)		With ball bearings	
	-radial	35.0 (125.9)	N (oz)
	-axial	100 (359.6)	N (oz)
22 Shaft Play:	-radial -axial	negligible negligible	mm (inch) mm (inch)
23 Weight	g	310 (10.94)	g (oz)

Execution Table

Gearbox	Single Shaft	E9	HEDS
R32	54	66	Upon Request
R40	1	96	Upon Request

No Load Speed vs. Torque

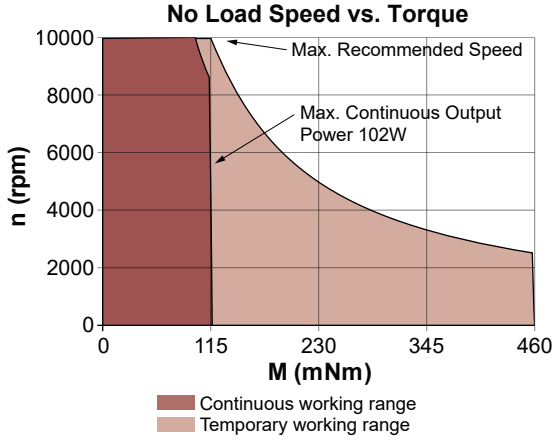

35GLT2R82

Ø 35 mm • Graphite-Copper commutation • 160 mNm

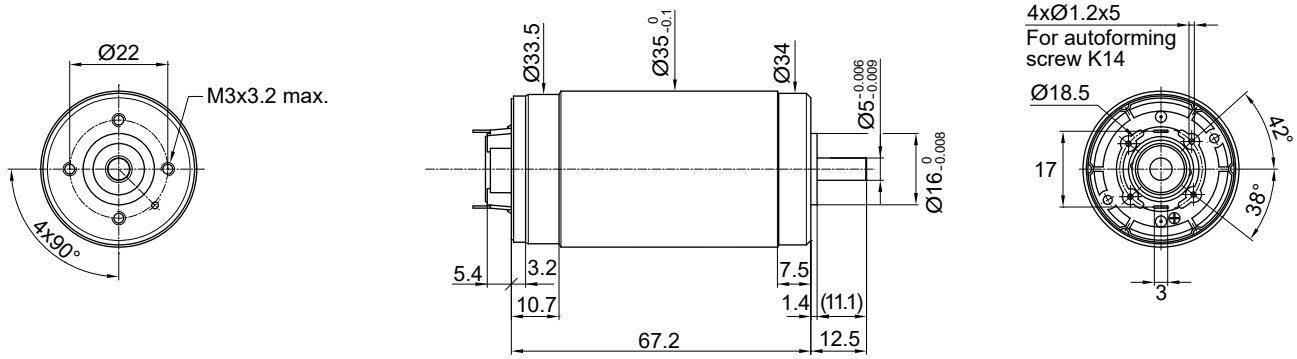

Dimensions in mm.

Electrical Data	Symbol	35GLT2R82 •••• .1 426P	326P	234E	426SP	426E	Unit
1 Nominal Voltage	V	24	24	48	48	90	Volt
2 No-Load Speed	n_0	6,260	5,835	7,490	6,175	5,439	rpm
3 No-Load Current	I_0	120.0	120.0	70.0	60.0	60.0	mA
4 Terminal Resistance	R	0.7	0.9	2.3	2.5	9.5	Ω
5 Output Power	$P_{2max.}$	136.0	124.0	122.0	142.0	150.0	W
6 Stall Torque	mNm	1327 (187.92)	1043 (147.71)	1300 (184.1)	1409 (199.54)	1487 (210.58)	mNm (oz-in)
7 Efficiency	$h_{max.}$	89	87	89	89	85	%
8 Max Continuous Speed	$n_{e\ max.}$	10,000	10,000	10,000	10,000	10,000	rpm
9 Max Continuous Torque	$M_{e\ max.}$	142 (18.7)	132 (18.7)	130 (18.41)	150 (21.25)	160 (22.66)	mNm (oz-in)
10 Max Continuous Current	$I_{e\ max.}$	4.20	3.50	2.20	2.10	1.05	A
11 Back-EMF Constant	k_E	3.82	4.09	6.39	7.75	16.44	mV/rpm
12 Torque Constant	k_M	36.50	39.10	61.00	74.00	157.00	mNm/A
13 Motor Regulation	R/k^2	0.5	0.6	0.6	0.46	0.39	10^3/Nms
14 Friction Torque	T_F	4.38 (0.63)	4.69 (0.67)	4.27 (0.61)	4.44 (0.63)	9.42 (1.34)	mNm (oz-in)
15 Rotor Inductance	L	0.10	0.15	0.25	0.40	1.70	mH
16 Mechanical Time Constant	τ_m	3.9	4.4	4.0	4.0	2.7	ms
17 Rotor Inertia	J	83.00	75.00	65.00	85.00	70.00	g-cm²

General Data			
18 Thermal Resistance (rotor/body)	R_{th1}/R_{th2}	4/8	°C/W
19 Thermal Time Constant (rotor/stator)	t_{W1}/t_{W2}	75/950	S
20 Operating Temperature Range:	motor rotor	-30°C to 85°C (-22°F to 185°F) 100°C (212°F)	°C (°F) °C (°F)
21 Shaft Load Max.: (5 mm. from bearing)	 -radial -axial	With ball bearings 35.0 (125.9) 100 (359.6)	 N (oz) N (oz)
22 Shaft Play:	-radial -axial	negligible negligible	mm (inch) mm (inch)
23 Weight	g	360 (12.7)	g (oz)

Execution Table

Gearbox	Single Shaft	E9	HEDS
R32	1	50	Upon Request
R40	1	50	Upon Request

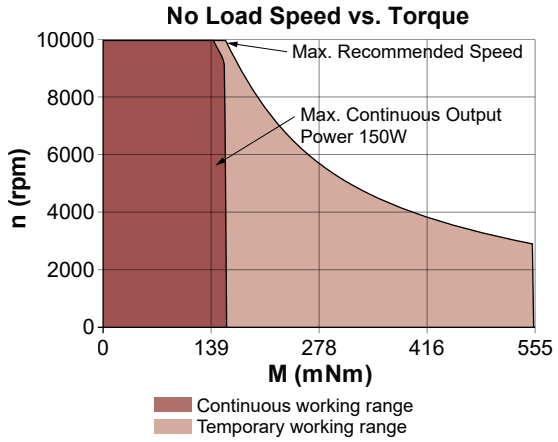

ROSIER Mécatronique

www.rosier.fr

V092018 • © 2018 Portescap. Specifications subject to change without notice.